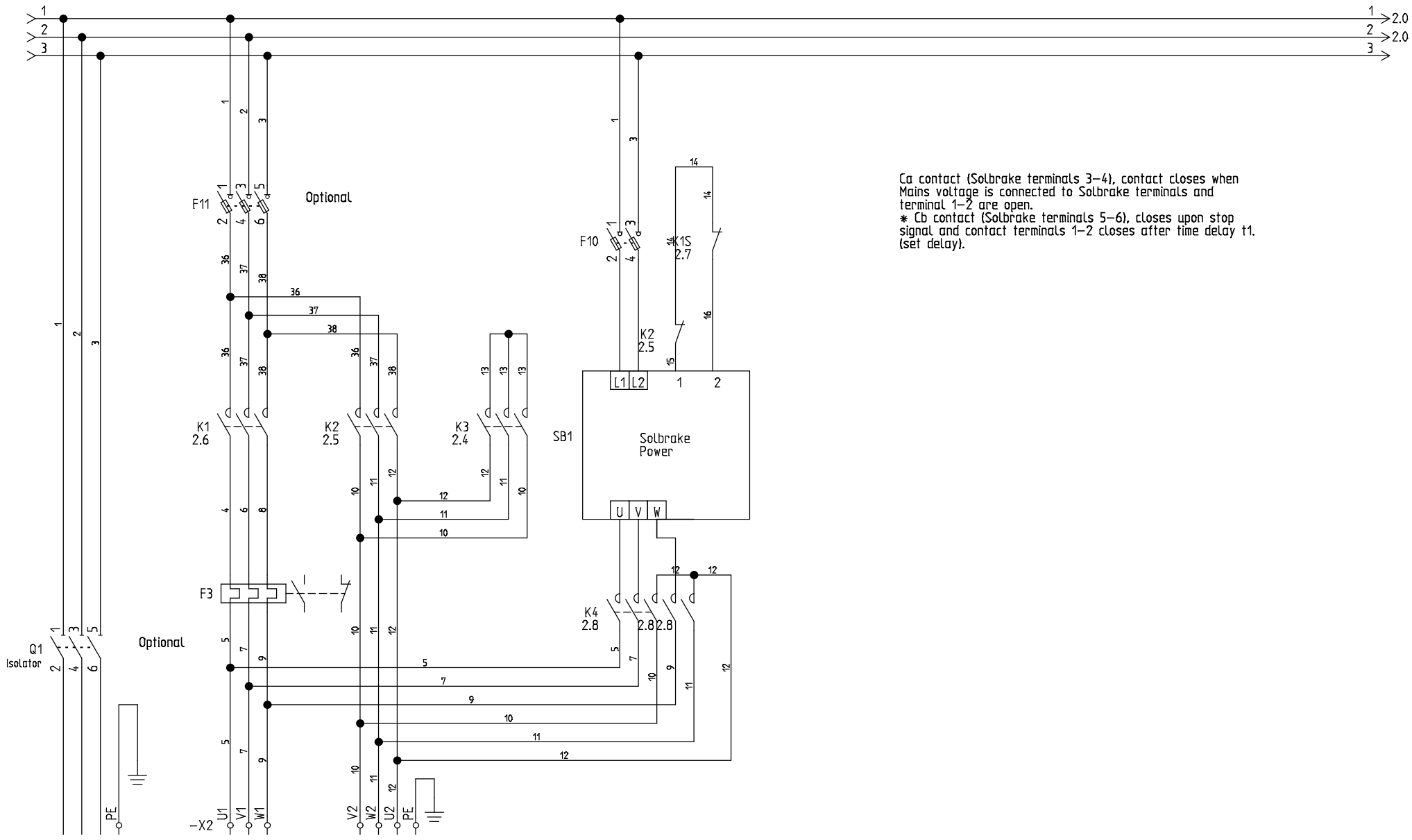

Ca contact (Solbrake terminals 3–4), contact closes when Mains voltage is connected to Solbrake terminals and terminal 1–2 are open.
* Cb contact (Solbrake terminals 5–6), closes upon stop signal and contact terminals 1–2 closes after time delay t1. (set delay).

The Motor Control Warehouse	The Motor Control Warehouse Unit 43, Mochdre Ind Estate, Newtown, Powys SY16 4LE www.motorcontrolwarehouse.co.uk	DC Brake with SDS	Project: SDS DC	Drawing no.:	Init.:	Rev.:	Sheet: 1
			Date: 10/08/2016	Function:	Location:	Total sheets: 2	Next sheet: 2

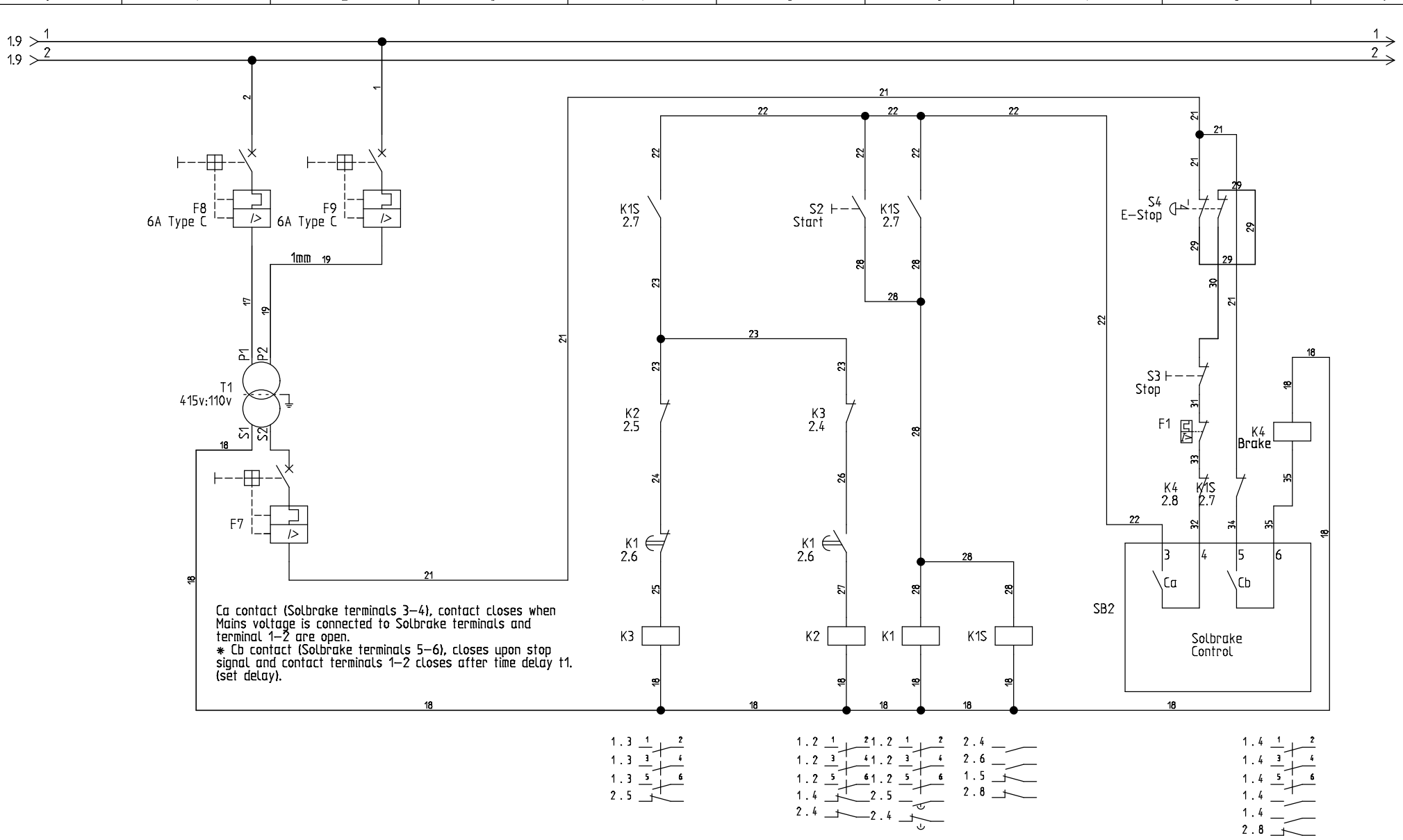

The Motor Control Warehouse	The Motor Control Warehouse Unit 43, Mochdre Ind Estate, Newtown, Powys SY16 4LE www.motorcontrolwarehouse.co.uk	DC Brake with SDS	Project: SDS DC	Drawing no.:	Init.:	Rev.:	Sheet: 2
			Date: 27/03/2017 14:06:21	Function:	Location:	Total sheets: 2	Next sheet: