Invertek Drives.com

OPTIDRIVE™ CP2

AC Variable Speed Drive

0.75kW – 250kW / 1HP – 350HP

200 – 480 Volt 1 & 3 Phase

Advanced User Guide

Revision 2.00

This Document is for use with version 1.30 Firmware.

Advanced User Guide Revision 1.20

Invertek Drives Ltd adopts a policy of continuous improvement and whilst every effort has been made to provide accurate and up to date information, the information contained in this User Guide should be used for guidance purposes only and does not form the part of any contract.

Revision History

Revision	Note
1.00	First Release
1.10	Updated to include V1.20 Firmware changes • Added comms info • Added additional technical specification • Updated parameter descriptions
1.20	Major updated to include V2.00 firmware changes Additional sections added Extensive revisions to parameter descriptions, ranges, default values and descritpions Revised Technical data and explanations iTHD table added Motor Performance Data Added Added Standby Consumption Added 600 Volt data Added DC Bus Voltage Thresholds
2.00	Updated to reflect V2.00 firmware enhancements

This user guide is intended to provide technical information and explanation of the operation and parameters of the Optidrive P2 product range. The information contained withn is intended to reflect the latest available firmware functionality at the time of release. This user guide must be read in conjunction with the Optidrive P2 User Guide included with each product, and in particular, all relevant safety information and warnings. The information is intended to reflect the product as accurately as possible, however Invertek Drives accepts no liability for information contained herein.

This document is intended for persons who are already familiar with the installation, mounting, start-up and operation of the equipment and the hazards involved. The reader should be trained and in the operation of electrical equipment, and heave the necessary authority to energize, de-energize, clear, ground and tag circuits and equipment in accordance with established safety procedures. In addition, they should be trained in the proper care and use of protective equipment in accordance with established safety procedures.

1. Optidrive P2 Parameter Set Overview 4
1.1. About this section 4
1.2. Parameter Structure Overview 4
1.3. Parameter Descriptions 5
1.4. Parameter Group 9 – Programmable Logic Functions 22
1.5. Parameter Group 0 – Monitoring Parameters (Read Only) 26
1.6. P6-28 Value Selection 29
1.7. Control Terminal Connections 30
2. Drive Model Specific Parameter Variations 34
2.1. Available Effective Switching Frequency Options 34
2.2. V/F Mode Voltage Boost Setting Options 35
3. Embedded Firmware Functions 36
3.1. 24 Hour Time Clock 36
4. Fieldbus Interface Support 37
4.1. Fieldbus Interface Options 37
4.2. Fieldbus Support Overview 37
4.3. Simple Drive Control 37
4.4. Drive Control Word Definition :- 38
4.5. Drive Status Word Definition 38
4.6. Parameter Access Overview 38
4.7. Parameter Access Tables 40
5. Diagnostic and Fault Messages 58
6. Rated Temperatures and De-rating curves 59
6.1. Thermal Management 59
6.2. De-rating Curves Explained 59
6.3. Size 2, 200-240V 60
6.4. Size 2, 380-480V 62
6.5. Size 3, 200-240V & 380 – 480V 64
6.6. Size 4, 200 – 240V & 380-480V, ... 66
6.7. Size 5, 200 – 240V & 380-480V, ... 67
6.8. Size 6, 200 – 240V & 380-480V, ... 68
6.9. Size 7, 200 – 240V & 380-480V, ... 69
7. Immunity Tests 70
7.1. Electrostatic Discharge (ESD) 70
7.2. Electrical Fast Transient Burst (EFT/B) 70
7.3. Surge 70
7.4. Dielectric strength (Flash) 70
8. General Technical and Performance Data 71
8.1. Electrical Data 71
8.2. Input Output Current Ratings 71
8.3. Standby Power Consumption 74
8.4. DC Bus Discharge Time 74
8.5. Earth Leakage Current (Touch Current) 75
8.6. Digital & Analog I/O 76
8.7. Environmental Data 77
8.8. Response Times 77
8.9. Motor Control Performance 77
8.10. Output Current Limit 78
8.11. Under / Over Voltage Trip Levels 79

1. Optidrive P2 Parameter Set Overview

1.1. About this section

This document provides a list of the available parameters, and a description of their respective functions, for the Optidrive P2.

1.2. Parameter Structure Overview

The parameter set is arranged in Groups according to the following structure

Parameter Group	Range	Name	Access Level	Access Type
Group 0	P0-01 to P0-50	Basic Monitoring	Extended	Read Only
	P0-51 to P0-80	Advanced Monitoring	Advanced	Read Only
Group 1	P1-01 to P1-14	Quick Start Menu	Basic	Read / Write
Group 2	P2-01 to P2-40	Extended Parameters	Extended	Read / Write
Group 3	P3-01 to P3-12	PID Controller	Extended	Read / Write
Group 4	P4-01 to P4-12	Motor Control	Extended	Read / Write
Group 5	P5-01 to P5-10	Communications	Extended	Read / Write
Group 6	P6-01 to P6-30	Advanced Functions	Advanced	Read / Write
Group 7	P7-01 to P7-10	Advanced Motor Data	Advanced	Read / Write
Group 8	P8-01 to P8-10	Application Specific Group	Advanced	Read / Write
Group 9	P9-01 to P9-30	Programmable Logic	Advanced	Read / Write

Access to all parameter groups is controlled by setting P1-14 as follows
P1-14 = P2-40 (Factory setting: 101) Allows Extended Parameter Access
P1-14 = P6-30 (Factory Setting: 201) Allows Advanced Parameter Access

1.3. Parameter Descriptions

1.3.1. Parameter Group 1 – Basic Parameters

Par.	Name	Minimum	Maximum	Default	Units
P1-01	**Maximum Frequency / Speed Limit**	P1-02	500.0 / 30000	50.0 (60.0)	Hz / Rpm
	Maximum output frequency or motor speed limit – Hz or rpm. If P1-10 > 0, the value entered / displayed is in Rpm The value which may be entered by the user is limited by the lower of the following :- 5 x P1-09 value P2-24 / 16				
P1-02	**Minimum Frequency / Speed Limit**	0.0	P1-01	0.0	Hz / Rpm
	Minimum speed limit – Hz or rpm. If P1-10 >0, the value entered / displayed is in Rpm				
P1-03	**Acceleration Ramp Time**	See Below		5.0	Seconds
	Acceleration ramp time from 0 to base speed (P-1-09) in seconds. **Note** For Optidrive P2 units Frame Sizes 2 and 3, the parameter range is adjustable between 0.00 and 600.0 seconds For Optidrive P2 units Frame Sizes 4 and above, the parameter range is adjustable between 0.0 and 6000.0 seconds				
P1-04	**Deceleration Ramp Time**	See Below		5.0	Seconds
	Deceleration ramp time from base speed (P1-09) to standstill in seconds. When set to zero, fastest possible ramp time without trip is activated **Note** For Optidrive P2 units Frame Sizes 2 and 3, the parameter range is adjustable between 0.00 and 600.0 seconds For Optidrive P2 units Frame Sizes 4 and above, the parameter range is adjustable between 0.0 and 6000.0 seconds				
P1-05	**Stop Mode**	0	4	0	-
	This parameter has several functions :- - To enable / disable the brake chopper during deceleration - To select the stopping mode (Ramp or Coast) - To enable the AC Flux Braking function **0 : Ramp To Stop**. When the enable signal is removed, the drive will ramp to stop, with the rate controlled by P1-04 as described above. In this mode, the drive brake transistor is disabled. **1 : Coast to Stop**. When the enable signal is removed, the drive output is immediately disabled, and the motor will coast (freewheel) to stop. If the load can continue to rotate due to inertia, and the drive may possibly be re-enabled whilst the motor is still rotating, the spin start function (P2-26) should be enabled. In this mode, the drive brake transistor is disabled. **2 : Ramp To Stop, Brake Chopper Enabled**. When the enable signal is removed, the drive will ramp to stop, with the rate controlled by P1-04 as described above. The brake chopper is also enabled in this mode. **3 : Coast to Stop, Brake Chopper Enabled**. When the enable signal is removed, the drive output is immediately disabled, and the motor will coast (freewheel) to stop. If the load can continue to rotate due to inertia, and the drive may possibly be re-enabled whilst the motor is still rotating, the spin start function (P2-26) should be enabled. The drive brake chopper is enabled in this mode, however it will only activate when required during a change in the drive frequency setpoint, and will not activate when stopping. **4 : AC Flux Braking.** AC Flux braking provides improved braking torque during stopping and dceceleration. In this mode, the brake chopper is disabled, however braking torque is improved.				
P1-06	**Energy Optimiser**	0	1	0	-
	Only active when enhanced V/F motor control mode is selected (P4-01 = 2). **0 : Disabled** **1 : Enabled**. When enabled, the Energy Optimiser attempts to reduce the overall energy consumed by the drive and motor when operating at constant speeds and light loads. The output voltage applied to the motor is reduced. The Energy Optimiser is intended for applications where the drive may operate for some periods of time with constant speed and light motor load, whether constant or variable torque.				
P1-07	**Motor Rated Voltage**	0	See Below	See Below	Volts
	This parameter should be set to the rated (nameplate) voltage of the motor (Volts) The factory default setting of this parameter is drive model dependent as follows :- All kw & HP models intended for 200 – 240 volt operation (e.g. ODP-2-x2xxx-xxF4x) : Factory setting = 230 Volts, Maximum 250 Volts All kW models intended for 380 – 480 volt operation (e.g. ODP-2-x4xxx-3KFxN) : Factory setting = 400 Volts, Maximum 500 Volts All HP models intended for 380 – 480 volt operation (e.g. ODP-2-x4xxx-3HFxN) : Factory setting = 460 Volts, Maximum 500 Volts When this parameter is set to the motor nameplate voltage, the output voltage from the drive is controlled automatically and maintained at the correct level wherever possible regardless of variations in supply voltage or DC Bus Voltage. When P1-07 = 0, the voltage compensation function of the inverter is disabled. The output voltage applied to the motor will increase or decrease with changes in the DC Bus voltage. **Note** The RMS output voltage from the inverter can never exceed the incoming supply voltage.				
P1-08	**Motor Rated Current**	-	-	See Below	Amps
	This parameter should be set to the rated (nameplate) current of the motor. The factory default setting of this parameter is the set to the maximum continuously available output current of the drive				

P1-09	**Motor Rated Frequency**	10	500	60 (60)	Hz
	This parameter should be set to the rated (nameplate) frequency of the motor. The factory default setting of this parameter is drive model dependent as follows :- All kW models (e.g. ODP-2-xxxxx-xKFxx) : Factory setting = 50Hz All HP models (e.g. ODP-2-xxxxx-xHFxx) : Factory setting = 60 Hz				
P1-10	**Motor Rated Speed**	0	30000	0	Rpm
	This parameter can optionally be set to the rated (nameplate) rpm of the motor. When set to the default value of zero, all speed related parameters are displayed in Hz, and the slip compensation for the motor is disabled. Entering the value from the motor nameplate enables the slip compensation function, and the Optidrive display will now show motor speed in estimated rpm. All speed related parameters, such as Minimum and Maximum Speed, Preset Speeds etc. will also be displayed in Rpm. **Note** When the drive is operated with the optional Encoder Feedback Interface, this parameter must be set to the correct nameplate Rpm of the connected motor.				
P1-11	**V/F Mode Voltage Boost**	0.0	See Below	See Below	%
	This parameter is effective only when operating in V/F Mode (P4-01 = 2). Voltage boost is used to increase the applied motor voltage at low output frequencies, in order to improve low speed and starting torque. Excessive voltage boost levels may result in increased motor current and temperature, and force ventilation of the motor may be required. An automatic setting (AUto) is also possible, whereby the Optidrive will automatically adjust this parameter based on the motor parameters measured during an autotune. The factory default and maximum limit for this parameter are drive model dependent, refer to section 0 for further information				
P1-12	**Primary Command Source Mode**	0	6	0	-
	0 : Terminal Control. The drive responds directly to signals applied to the control terminals. **1 : Uni-directional Keypad Control** [1)2)3)] The drive can be controlled in the forward direction only using an external or remote Keypad **2 : Bi-directional Keypad Control** [4)] The drive can be controlled in the forward and reverse directions using an external or remote Keypad. Pressing the keypad START button toggles between forward and reverse. **3 : PID Control**. The output frequency is controlled by the internal PID controller. **4 : Fieldbus Control**. Control via Modbus RTU if no fieldbus interface option is present, otherwise control is from the fieldbus option module interface **5 : Slave Mode**. The drive acts as a Slave to a connected Optidrive operating in Master Mode **6 : CAN bus Control.** Control via CAN bus connected to the RJ45 serial interface connector **Note** 1) When operating with P1-12 = 1 or 2, the drive will not operate the motor unless the enable signal is present (e.g. Control Terminals 1 & 2 are linked together), regardless of the setting of P2-37. If P2-37 > = 4, the drive will start when the link is closed between terminals 1 & 2, and will not require the keypad start button to be pressed. If P2-37 < 4, the Start Button must be pressed to operate the drive after the link is closed between terminals 1 & 2. 2) The motor direction of rotation may still be controlled by signals applied to the digital inputs, dependent on the setting of P1-13, e.g. the motor can still be controlled in both forward and reverse directions if required, however the Reverse direction function of the Start key is disabled. 3) When operating in this mode and utilising a setting of P1-13 that allows preset speeds to be also selected from the drive digital inputs, setting a negative value in the preset speed parameter will cause the drive to reverse the direction of motor rotation. 4) When P1-12 = 2, the direction of motor rotation may be changed by any of the following :- a. Pressing the keypad Start button b. A Reverse Digital Input, dependent on the setting of P1-13 c. Selecting a Negative Preset Speed It is important to ensure that a combination of the above used incorrectly does not result in unexpected operation.				
P1-13	**Digital Inputs Function Select**	0	21	1	-
	Defines the function of the digital inputs depending on the control mode setting in P1-12. See section 1.7 on page 30 for further information.				
P1-14	**Extended Menu Access Code**	0	30000	0	-
	Parameter Access Control. The following settings are applicable : P1-14 = P2-40 (Factory Setting = 101) : Allows access to Parameter Groups 0 – 5 P1-14 = P6-30 (Factory Setting = 201) : Allows Access to all drive parameters				

1.3.2. Parameter Group 2 - Extended parameters

Par.	Name	Minimum	Maximum	Default	Units
P2-01	**Preset / Jog Frequency / Speed 1**	-P1-01	P1-01	5.0	Hz / Rpm
P2-02	**Preset / Jog Frequency / Speed 2**	-P1-01	P1-01	10.0	Hz / Rpm
P2-03	**Preset / Jog Frequency / Speed 3**	-P1-01	P1-01	25.0	Hz / Rpm
P2-04	**Preset / Jog Frequency / Speed 4**	-P1-01	P1-01	50.0 (60.0)	Hz / Rpm
P2-05	**Preset / Jog Frequency / Speed 5**	-P1-01	P1-01	0.0	Hz / Rpm
P2-06	**Preset / Jog Frequency / Speed 6**	-P1-01	P1-01	0.0	Hz / Rpm
P2-07	**Preset / Jog Frequency / Speed 7**	-P1-01	P1-01	0.0	Hz / Rpm
P2-08	**Preset / Jog Frequency / Speed 8**	-P1-01	P1-01	0.0	Hz / Rpm
	Preset Speeds / Frequencies which may be selected by the digital inputs dependent on the setting of P1-13 (Refer to section 1.7 on page 30). If P1-10 = 0, the values are entered as Hz. If P1-10 > 0, the values are entered as Rpm. Setting a negative value will reverse the direction of motor rotation.				
P2-09	**Skip Frequency Centre Point**	0.0	P1-01	0.0	Hz
P2-10	**Skip Frequency Band Width**	0.0	P1-01	0.0	Hz
	The Skip Frequency function is used to avoid the Optidrive operating at a certain output frequency, for example at a frequency which causes mechanical resonance in a particular machine. Parameter P2-09 defines the centre point of the skip frequency band, and is used conjunction with P2-10. The Optidrive output frequency will ramp through the defined band at the rates set by the acceleration and deceleration ramps currently in use, and will not hold any output frequency within the defined band. If the frequency reference applied to the drive is within the band, the Optidrive output frequency will remain at the upper or lower limit of the band.				
P2-11	**Analog Output 1 (Terminal 8) Function Select**	0	12	8	-
	Digital Output Mode. Logic 1 = +24V DC (20mA Max) **0 : Drive Enabled (Running)**. Logic 1 when the Optidrive is enabled (Running) **1 : Drive Healthy**. Logic 1 When no Fault condition exists on the drive and the STO input is closed. **2 : At Target Frequency (Speed)**. Logic 1 when the output frequency matches the setpoint frequency and the drive is enabled. Hysterisis is applied, defined by P6-04. **3 : Output Frequency > 0.0**. Logic 1 when the motor runs above zero speed. Hysterisis is applied, defined by P6-04. **4 : Output Frequency >= Limit**. Logic 1 when the motor speed exceeds the adjustable limit **5 : Output Current >= Limit**. Logic 1 when the motor current exceeds the adjustable limit **6 : Motor Torque >= Limit**. Logic when the motor torque exceeds the adjustable limit **7 : Analog Input 2 Signal Level >= Limit**. Logic when the signal applied to the Analog Input 2 exceeds the adjustable limit **Note** : When using settings 4 – 7, parameters P2-16 and P2-17 must be used together to control the behaviour. The output will switch to Logic 1 when the selected signal exceeds the value programmed in P2-16, and return to Logic 0 when the signal falls below the value programmed in P2-17. **Analog Output Mode** **8 : Output Frequency (Motor Speed)**. 0 to P-01 **9 : Output (Motor) Current**. 0 to 200% of P1-08 **10 : Motor Torque**. 0 to 200% of motor rated torque **11 : Output (Motor) Power**. 0 to 200% of drive rated power **12 : PID Controller Output.** 0 – 100% of PID Controller Output				
P2-12	**Analog Output 1 (Terminal 8) Format**	-	-	U 0- 10	-
	U 0- 10 = 0 to10V. U 10-0 = 10 to 0V, A 0-20 = 0 to 20mA A 20-0 = 20 to 0mA A 4-20 = 4 to 20mA A 20-4 = 20 to 4mA				

Par.	Name	Minimum	Maximum	Default	Units
P2-13	**Analog Output 2 (Terminal 11) Function Select**	0	12	9	-

Digital Output Mode. Logic 1 = +24V DC

0 : Drive Enabled (Running). Logic 1 when the Optidrive is enabled (Running)
1 : Drive Healthy. Logic 1 When no Fault condition exists on the drive
2 : At Target Frequency (Speed). Logic 1 when the output frequency matches the setpoint frequency. Hysterisis is applied, defined by P6-04.
3 : Output Frequency > 0.0. Logic 1 when the motor runs above zero speed. Hysterisis is applied, defined by P6-04.
4 : Output Frequency >= Limit. Logic 1 when the motor speed exceeds the adjustable limit
5 : Output Current >= Limit. Logic 1 when the motor current exceeds the adjustable limit
6 : Output Toque >= Limit. Logic when the motor torque exceeds the adjustable limit
7 : Analog Input 2 Signal Level >= Limit. Logic when the signal applied to the Analog Input 2 exceeds the adjustable limit
Note : When using settings 4 – 7, parameters P2-16 and P2-17 must be used together to control the behaviour. The output will switch to Logic 1 when the selected signal exceeds the value programmed in P2-16, and return to Logic 0 when the signal falls below the value programmed in P2-17.

Analog Output Mode

8 : Output Frequency (Motor Speed). 0 to P-01
9 : Output (Motor) Current. 0 to 200% of P1-08
10 : Motor Torque. 0 to 200% of motor rated torque
11 : Output (Motor) Power. 0 to 200% of drive rated power
12 : PID Controller Output. 0 – 100% of PID Controller Output

P2-14	**Analog Output 2 (Terminal 11) Format**	-	-	U 0- 10	-

U 0- 10 = 0 to10V.
U 10-0 = 10 to 0V,
A 0-20 = 0 to 20mA
A 20-0 = 20to 0mA
A 4-20 = 4 to 20mA
A 20-4 = 20 to 4mA

P2-15	**User Relay 1 Output (Terminals 14, 15 & 16) Function select**	0	14	1	-

Selects the function assigned to Relay Output 1. The relay has three output terminals, Logic 1 indicates the relay is active, and therefore terminals 14 and 15 will be closed together.
0 : Drive Enabled (Running). Logic 1 when the motor is enabled
1 : Drive Healthy. Logic 1 when power is applied to the drive and no fault exists
2 : At Target Frequency (Speed). Logic 1 when the output frequency matches the setpoint frequency. Hysterisis is applied, defined by P6-04.
3 : Output Frequency > 0.0 Hz. Logic 1 when the drive output frequency to the motor is exceeds 0.0Hz. Hysterisis is applied, defined by P6-04.
4 : Output Frequency >= Limit. Logic 1 when the motor speed exceeds the adjustable limit
5 : Output Current >= Limit. Logic 1 when the motor current exceeds the adjustable limit
6 : Output Torque >= Limit. Logic 1 when the motor torque exceeds the adjustable limit
7 : Analog Input 2 Signal Level >= Limit. 1 Logic when the signal applied to the Analog Input 2 exceeds the adjustable limit
8 : No Function
9 : No Function
10 : Service Due. Logic 1 when the user settable maintenance time (P6-24) has expired. This allows the user to set a service interval time, for example in the even where a machine requires a defiend service time interval for maintenance, the drive can provide visual indication of the maintenance interval.
11 : Drive Ready to Run. Defined as not in inhibit mode, hardware enable present, not in mains loss condition and no trip.
12 : Drive Tripped. Logic 1 when the drive has tripped and the display shows a fault.
13 : STO Status. Logic 1 when the STO inputs are present, and the drive is not in inhibit state
Note : When using settings 4 – 7, parameters P2-16 and P2-17 must be used together to control the behaviour. The output will switch to Logic 1 when the selected signal exceeds the value programmed in P2-16, and return to Logic 0 when the signal falls below the value programmed in P2-17.
14 : PID Error >= Limit. Logic 1 when the PID Error exceeds the adjustable threshold

P2-16	**Adjustable Threshold 1 Upper Limit (Analog Output 1 / Relay Output 1)**	P2-17	200.0	100.0	%
P2-17	**Adjustable Threshold 1 Lower Limit (Analog Output 1 / Relay Output 1)**	0.0	P2-16	0.0	%

Used in conjunction with some settings of Parameters P2-11 & P2-15.

Par.	Name	Minimum	Maximum	Default	Units
P2-18	**User Relay 2 Output (Terminals 17 & 18) Function select**	0	14	0	-
	Selects the function assigned to Relay Output 2. The relay has two output terminals, Logic 1 indicates the relay is active, and therefore terminals 17 and 18 will be linked together. **0 : Drive Enabled (Running)**. Logic 1 when the motor is enabled **1 : Drive Healthy**. Logic 1 when power is applied to the drive and no fault exists **2 : At Target Frequency (Speed)**. Logic 1 when the output frequency matches the setpoint frequency. Hysterisis is applied, defined by P6-04. **3 : Output Frequency > 0.0 Hz**. Logic 1 when the drive output frequency to the motor is exceeds 0.0Hz. Hysterisis is applied, defined by P6-04. **4 : Output Frequency >= Limit**. Logic 1 when the motor speed exceeds the adjustable limit **5 : Output Current >= Limit**. Logic 1 when the motor current exceeds the adjustable limit **6 : Output Torque >= Limit**. Logic 1 when the motor torque exceeds the adjustable limit **7 : Analog Input 2 Signal Level >= Limit**. 1 Logic when the signal applied to the Analog Input 2 exceeds the adjustable limit **8 : Hoist Brake Control**. When P2-18 = 8, the Optidrive is set to 'Hoist Mode Operation', and output relay 2 must be used to control the motor holding brake. **9 : No Function** **10 : Service Due**. Logic 1 when the user settable maintenance time (P6-24) has expired. This allows the user to set a service interval time, for example in the even where a machine requires a defiend service time interval for maintenance, the drive can provide visual indication of the maintenance interval. **11 : Drive Ready to Run**. Defined as not in inhibit mode, hardware enable present, not in mains loss condition and no trip. **12 : Drive Tripped.** Logic 1 when the drive has tripped and the display shows a fault. **13 : STO Status.** Logic 1 when the STO inputs are present, and the drive is not in inhibit state **Note** : When using settings 4 – 7, parameters P2-19 and P2-20 must be used together to control the behaviour. The output will switch to Logic 1 when the selected signal exceeds the value programmed in P2-19, and return to Logic 0 when the signal falls below the value programmed in P2-20. **14 : PID Error >= Limit.** Logic 1 when the PID Error exceeds the adjustable threshold				
P2-19	**Adjustable Threshold 1 Upper Limit (Analog Output 2 / Relay Output 2)**	P2-20	200.0	100.0	%
P2-20	**Adjustable Threshold 1 Lower Limit (Analog Output 2 / Relay Output 2)**	0.0	P2-19	0.0	%
	Used in conjunction with some settings of Parameters P2-13 & P2-18.				
P2-21	**Display Scaling Factor**	-30.000	30.000	0.000	-
P2-22	**Display Scaling Source**	0	3	0	-
	P2-21 & P2-22 allow the user to program the Optidrive to display an alternative output unit scaled from an existing parameter, e.g. to display conveyer speed in metres per second based on the output frequency. This function is disabled if P2-21 is set to 0. If P2-21 is set >0, the variable selected in P2-22 is multiplied by the factor entered in P2-21, and can be displayed whilst the drive is running. The display will show a 'c' on the left hand side to indicate the customer scaled units. **P2-22 Setting Options :-** **0 : Motor Speed** **1 : Motor Current** **2 : Analog Input 2** **3 : P0-80 Value**				
P2-23	**Zero Speed Holding Time**	0.0	60.0	0.2	Seconds
	Determines the time for which the drive output frequency is held at zero when stopping, before the drive output is disabled. This can be utilised to ensure the motor has come to a complete standstill before the drive switches off, or to allow time for a holding brake to engage. It is not intended to provide a continuous output holding torque for prolonged periods. When operating in V/F mode, the output voltage and hence current will be dependent on the setting of P1-11. When operating in Vector Mode, the output voltage and current are automatically controlled by the vector algorithm.				
P2-24	**Effective Switching Frequency**	See Below			kHz
	Effective power stage switching frequency. The range of settings available and factory default parameter setting depend on the drive power and voltage rating, refer to section 2.1. Higher frequencies reduce the audible 'ringing' noise from the motor, and improve the output current waveform, at the expense of increased drive heat losses.				
P2-25	**Fast Deceleration Ramp Time (Fast Stop)**	0.00	240.0	0.00	Seconds
	This parameter allows an alternative deceleration ramp down time to be programmed into the Optidrive, which can be selected by digital inputs (dependent on the setting of P1-13) or selected automatically in the case of a mains power loss if P2-38 = 2. When set to 0.00, the drive output will be immediately disabled, and the load will coast to stop.				

Par.	Name	Minimum	Maximum	Default	Units
P2-26	**Spin Start Enable**	0	2	0	-
	0 : Disabled **1 : Enabled**. When enabled, on start up the drive will attempt to determine if the motor is already rotating, and will begin to control the motor from its current speed. This can be useful for high inertia loads, or fans which may spin due to air movement even when the drive is not enabled. A short delay may be observed when starting motors which are not already rotating. The spin start will detect the motor direction of rotation, and will automatically operate and control the motor from that point, including reversing the direction of motor rotation where required. **2 : Enabled on Fault, Brown Out or Coast.** As setting one, however the Spin Start function activates only following any event that may have caused an uncontrolled stop of the motor previously. **Note** The Spin Start function cannot detect motors which are rotating at speeds above the maximum speed limit parameter (P1-01) setting of the drive.				
P2-27	**Standby Mode Timer**	0.0	250.0	0.0	Seconds
	This parameter defines time period, whereby if the drive operates continuously at minimum frequency / speed for at least the set time period, the Optidrive output will be disabled, and the display will show StndbY. The function is disabled if P2-27 = 0.0. If the speed demand rises above minimum, the drive will immediately restart automatically.				
P2-28	**Slave Speed Scaling Control**	0	3	0	-
	Active in Slave mode (P1-12=5) only. The Master speed reference can be multiplied by a preset scaling factor or adjusted using an analog trim or offset. **0 : Disabled**. No scaling or offset is applied. **1 : Actual Speed = Master Speed x P2-29** **2 : Actual Speed = (Master Speed x P2-29) + Analog Input 1 Reference.** Analog Input 1 Full Scale 100.0% = P1-01 **3 : Actual Speed = (Master Speed x P2-29) x Analog Input 1 Reference.** Analog input 1 full scale = 200.0% (unsigned/absolute)				
P2-29	**Slave Speed Scaling Factor**	-500.0	500.0	100.0	%
	Used in conjunction with P2-28.				
P2-30	**Analog Input 1 (Terminal 6) Format**	-	-	U 0- 10	-
	U 0- 10 = 0 to 10 Volt Signal (Uni-polar) U 10-0 = 10 to 0 Volt Signal (Uni-polar) - 10- 10 = -10 to +10 Volt Signal (Bi-polar) A 0-20 = 0 to 20mA Signal t 4-20 = 4 to 20mA Signal, the Optidrive will trip and show the fault code 4-20F if the signal level falls below 3mA r 4-20 = 4 to 20mA Signal. In the event that the signal falls below 3mA, the Optidrive will ramp operate at Preset Speed 4. t 20-4 = 20 to 4mA Signal, the Optidrive will trip and show the fault code 4-20F if the signal level falls below 3mA r 20-4 = 20 to 4mA Signal. In the event that the signal falls below 3mA, the Optidrive will ramp operate at Preset Speed 4.				
P2-31	**Analog Input 1 Scaling**	0.0	2000.0	100.0	%
	Scales the analog input by this factor. See parameter description below for further information.				
P2-32	**Analog Input 1 Offset**	-500.0	500.0	0.0	%
	Sets an offset, as a percentage of the full scale range of the input, which is applied to the analog input signal. Analog Input Scaling and Offset are applied to the Analog Input Signal as follows :- Result (%) = (Analog Input Level (%) – Analog Input Offset (%)) x Analog Input Scaling (%) The resultant value for Analog Input 1 can be displayed in P0-01. E.g. If the analog Input Signal format is 0 – 10 Volts, Offset = 20.0%, Scaling = 50.0% An analog input signal level of 7 Volts gives the following result :- Analog Input Level (%) = 7 / 10 = 70.0% Result = (70.0 – 20.0)% X 50.0%) = 25.0%				
P2-33	**Analog Input 2 (Terminal 10) Format**	-	-	U 0- 10	-
	U 0- 10 = 0 to 10 Volt Signal (Uni-polar) U 10-0 = 10 to 0 Volt Signal (Uni-polar) Ptc-th = Motor PTC Thermistor Input. The drive will trip if the resistance is greater than 2.5kΩ A 0-20 = 0 to 20mA Signal t 4-20 = 4 to 20mA Signal, the Optidrive will trip and show the fault code 4-20F if the signal level falls below 3mA r 4-20 = 4 to 20mA Signal, the Optidrive will ramp to stop if the signal level falls below 3mA t 20-4 = 20 to 4mA Signal, the Optidrive will trip and show the fault code 4-20F if the signal level falls below 3mA r 20-4 = 20 to 4mA Signal, the Optidrive will ramp to stop if the signal level falls below 3mA				
P2-34	**Analog Input 2 Scaling**	0.0	2000.0	100.0	%
	Scales the analog input by this factor. See parameter description below for further information.				
P2-35	**Analog Input 2 Offset**	-500.0	500.0	0.0	%
	Sets an offset, as a percentage of the full scale range of the input, which is applied to the analog input signal Analog Input Scaling and Offset are applied to the Analog Input Signal as follows :- Result (%) = (Analog Input Level (%) – Analog Input Offset (%)) x Analog Input Scaling (%) The resultant value for Analog Input 2 can be displayed in P0-02. E.g. If the analog Input Signal format is 0 – 10 Volts, Offset = 20.0%, Scaling = 50.0% An analog input signal level of 7 Volts gives the following result :- Analog Input Level (%) = 7 / 10 = 70.0% Result = (70.0 – 20.0)% X 50.0%) = 25.0%				

Par.	Name	Minimum	Maximum	Default	Units
P2-36	**Start Mode Select / Automatic Restart**	-	-	Auto-0	-
	Defines the behaviour of the drive relating to the enable digital input and also configures the Automatic Restart function. EdgE-r : Following Power on or reset, the drive will not start if Digital Input 1 remains closed. The Input must be closed after a power on or reset to start the drive (e.g. Edge Triggered). Auto-0 : Following a Power On or Reset, the drive will automatically start if Digital Input 1 is closed before power on. Auto- 1 to Auto-5 : Following a trip, the drive will make up to 5 attempts to restart at intervals defined by P6-03 (default 20 seconds). The drive must be powered down or reset manually to reset the counter. The numbers of restart attempts are counted, and if the drive fails to start on the final attempt, the drive will fault with, and will require the user to manually reset the fault.				
P2-37	**Keypad / Fieldbus Starting Control**	0	7	1	-
	This parameter controls the starting behaviour of the drive when operating in Keypad Mode or Fieldbus Mode (selected by P1-12). Settings 0 to 3 are active in Keypad Mode only (P1-12 = 1 or 2), and define the speed at which the drive will initially operate following the pressing of the keypad Start button. **0 : Minimum Speed, Keypad Start**. Following a stop and restart, the drive will always initially run at the minimum speed set in P1-02. This applies even if the drive is re-enabled whilst still decelerating the motor from the previous stop command. **1 : Previous Operating Speed, Keypad Start**. Following a stop and restart, the drive will return to the last keypad setpoint speed used prior to stopping. **2 : Current Running Speed**. Where the Optidrive is configured for multiple speed references, when switched to keypad mode by a digital input, the drive will continue to operate at the last operating speed. This setting can be used for 'Bumpless' changeover between automatic and manual operating modes of the drive, e.g. typically Hand / Auto control or Local / Remote control. **3 : Preset Speed 8, Keypad Start**. Following a stop and restart, the Optidrive will always initially run at Preset Speed 8 (P2-08) **4 : Minimum Speed, Terminal Start**. Following a stop and restart, the drive will always initially run at the minimum speed P1-02. The drive starting is controlled from the digital inputs, based on the setting of P1-13. **5 : Previous Operating Speed, Terminal Start**. Following a stop and restart, the drive will return to the last keypad setpoint speed used prior to stopping. The drive starting is controlled from the digital inputs, based on the setting of P1-13. **6 : Current Running Speed, Terminal Start**. Where the Optidrive is configured for multiple speed references (typically Hand / Auto control or Local / Remote control), when switched to keypad mode by a digital input, the drive will continue to operate at the last operating speed. The drive starting is controlled from the digital inputs, based on the setting of P1-13. **7 : Preset Speed 8, Terminal Start**. Following a stop and restart, the Optidrive will always initially run at Preset Speed 8 (P2-08). The drive starting is controlled from the digital inputs, based on the setting of P1-13.				
P2-38	**Mains Loss Ride Through / Stop Control**	0	3	0	-
	Controls the behaviour of the drive in response to a loss of mains power supply whilst the drive is enabled. **0 : Mains Loss Ride Through**. The Optidrive will attempt to continue operating by recovering energy from the motor and connected load. Providing that the mains loss period is short (e.g. a 'Brown Out'), the drive enable control remains applied and that sufficient energy can be recovered before the drive control electronics power off, the drive will automatically maintain motor operation (with reduced output speed depending on the load), and recover back to the normal operating point on return of mains power. Where the mains power supply is lost for a longer period (e.g. a 'Black Out') and there is insufficient kinetic energy available from the load to maintain the drive electronic power supply, the restarting behaviour of the drive on return of the power supply will be controlled by P2-36. **1 : Coast To Stop**. On a loss of mains power supply, either 'Brown Out' or 'Black Out', the Optidrive will immediately disable the output to the motor, allowing the load to coast or free wheel. When using this setting with high inertia loads, which may still be rotating when the mains power returns, the Spin Start function (P2-26) should be enabled. **2 : Fast Ramp To Stop**. On a loss of mains power supply, either 'Brown Out' or 'Black Out', the Optidrive will attempt to decelerate the load to standstill at the rate programmed in the Fast deceleration time (P2-25), by recovering energy from the load. As the speed of the load approaches zero, if the mains power supply has not been restored, the drive control electronics may power down shortly before the load reaches a complete standstill. If the power returns whilst the drive is still decelerating the load, and the run signal is maintained, the drive will resume operation and accelerate the load back to the operating speed. **3 : DC Power Supply.** This option should be used where the drive is powered via the DC Bus terminals only, and no AC supply is present.				
P2-39	**Parameter Access Lock**	0	1	0	-
	0 : Unlocked. All parameters can be accessed and changed **1 : Locked**. Parameter values can be displayed, but cannot be changed				
P2-40	**Extended Parameter Access Code Definition**	0	9999	101	-
	Defines the access code which must be entered in P1-14 to access parameter groups above Group 1.				

1.3.3. Parameter Group 3 – PID Control

Par.	Name	Minimum	Maximum	Default	Units
P3-01	**PID Proportional Gain**	0.1	30.0	1.0	-
	PID Controller Proportional Gain. Higher values provide a greater change in the drive output frequency in response to small changes in the feedback signal. Too high a value can cause instability				
P3-02	**PID Integral Time Constant**	0.0	30.0	1.0	Seconds
	PID Controller Integral Time. Larger values provide a more damped response for systems where the overall process responds slowly				
P3-03	**PID Differential Time Constant**	0.00	1.00	0.00	Seconds
	PID Differential Time Constant				
P3-04	**PID Operating Mode**	0	1	0	-
	0 : Direct Operation. Use this mode if an increase in the motor speed should result in an increase in the feedback signal **1 : Inverse Operation**. Use this mode if an increase in the motor speed should result in a decrease in the feedback signal				
P3-05	**PID Reference (Setpoint) Source Select**	0	2	0	-
	Selects the source for the PID Reference / Setpoint **0 : Digital Preset Setpoint**. P3-06 is used **1 : Analog Input 1 Setpoint** **2 : Analog Input 2 Setpoint**				
P3-06	**PID Digital Reference (Setpoint)**	0.0	100.0	0.0	%
	When P3-05 = 0, this parameter sets the preset digital reference (setpoint) used for the PID Controller				
P3-07	**PID Controller Output Upper Limit**	P3-08	100.0	100.0	%
	Limits the maximum value output from the PID controller				
P3-08	**PID Controller Output Lower Limit**	0.0	P3-07	0.0	%
	Limits the minimum output from the PID controller				
P3-09	**PID Output Limit Control**	0	3	0	-
	0 : Digital Output Limits. The output range of the PID controller is limited by the values of P3-07 & P3-08 **1 : Analog Input 1 Provides a Variable Upper Limit**. The output range of the PID controller is limited by the values of P3-08 & the signal applied to Analog Input 1 **2 : Analog Input 1 Provides a Variable Lower Limit**. The output range of the PID controller is limited by the signal applied to Analog Input 1 & the value of P3-07 **3 : PID output Added to Analog Input 1 Value**. The output value from the PID Controller is added to the speed reference applied to the Analog Input 1				
P3-10	**PID Feedback Signal Source Select**	0	5	0	-
	0 : Analog Input 2 **1 : Analog Input 1** **2 : Motor Current**. The feedback value is scaled such that 100.0% = P1-08 **3 : DC bus voltage**. The feedback is scaled such that 100.0% = 1000 Volts **4 : Differential : Analog input 1 – Analog input 2.** PID Feedback = P0-01 – P0-02, limited to 0.0 minimum value **5 : Largest Value : Analog Input 1 or Analog Input 2.**				
P3-11	**Maximum PID Error to Enable Ramps**	0.0	25.0	0.0	%
	Defines a threshold PID error level, whereby if the difference between the setpoint and feedback values is less than the set threshold, the internal ramp times of the drive are disabled. Where a greater PID error exists, the ramp times are enabled to limit the rate of change of motor speed on large PID errors, and react quickly to small errors. Setting to 0.0 means that the drive ramps are always enabled. This parameter is intended to allow the user to disable the drive internal ramps where a fast reaction to the PID control is required, however by only disabling the ramps when a small PID error exists, the risk of possible over current or over voltage trips being generated are reduced.				
P3-12	**PID Feedback Value Display Scaling Factor**	0.000	50.000	0.000	-
	Applies a scaling factor to the displayed PID feedback, allowing the user to display the actual signal level from a transducer, e.g. 0 – 10 Bar etc. The value is displayed with an 'r' prefix, to one decimal place.				
P3-13	**PID Error Wake Up Level**	0.0	100.0	5.0	%
	Sets a programmable level whereby if the drive enters standby motor whilst operating under PID control, the difference between the setpoint and the selected feedback signal increase beyond this threshold before the drive will return to normal operation.				
P3-18	**PID Reset Control**	0	1	0	-
	This parameter is used to control the reset behaviour of the PID controller. **0 : Continuous Run**. In this mode, the PID controller operates continuously, regardless of the operating state of the drive. This can result in the output of the PID controller integrating up to the maximum limit prior to the drive being enabled. **1 : Reset On Disable**. In this mode, the PID controller output is reset to zero when the drive is disabled, and restarts when the drive is enabled.				

1.3.4. Parameter Group 4 – High Performance Motor Control

Par.	Name	Minimum	Maximum	Default	Units
	Incorrect adjustment of parameters in menu group 4 can cause unexpected behaviour of the motor and any connected machinery. It is recommended that these parameters are only adjusted by experienced users.				
P4-01	**Motor Control Mode**	0	6	2	-
	Selects the motor control method. An autotune must be performed if setting 0 or 1 is used. **0 : IM Motor Vector Speed Control with Torque Limit.** Suitable for use with AC induction motors, Vector Speed Control Mode provides greater low speed torque, and improved motor speed regulation with respect to load changes. The drive primarily operates in Speed Control Mode, where the motor speed is controlled by the chosen setpoint source. When the output torque level approaches the maximum limit, the drive will reduce the motor speed in attempt to reduce the torque demand required. The factory parameter settings allow a fixed maximum torque limit of 200% set in parameter P4-07. Alternative torque limit settings and variable torque limits may be selected using P4-06 and P4-07. **1 : IM Motor Vector Torque Control with Speed Limit.** Suitable for use with AC induction motors, when Vector Torque Control Mode is selected, the drive primarily operates in Torque Control Mode, where the motor attempt to generate the output torque level required by the torque setpoint source. This will generally cause the motor to accelerate in speed. When the output speed approaches the maximum limit, the drive will not accelerate beyond this point. The speed limit source should be selected by using P1-12 and P1-13, and the torque reference source should be set in P4-06. **2 : Speed Control (Enhanced V/F).** This operating mode is suitable for general purpose operation of standard induction motors. **3 : PM Motor Vector Speed Control.** Equivalent to setting 0, but intended for operation of Permanent Magnet motors. **4 : PM Motor Vector Torque Control.** Equivalent to setting 1, but intended for operation of Permanent Magnet motors. **5 : BLDC Motor Speed Control.** For operation of Brushless DC Motors. **6 : SynRel Motor Speed Control.** For operation of Synchronous Reluctance Motors. **Note** Options 3 to 6 are only available when Advanced Parameter Access has been set.				
P4-02	**Motor Parameter Auto-tune Enable**	0	1	0	-
	When set to 1, the drive immediately carries out an autotune to measure the motor parameters for optimum control and efficiency. Following completion of the autotune, the parameter automatically returns to 0. **Note** All motor nameplate data should be programmed into the drive, e.g. P1-07, P1-08, P1-09 and P4-05 prior to starting the autotune **Whilst the autotune does not require the motor to rotate, it may still cause some movement of the motor shaft, thereby it is important to ensure that the motor and load are safe to operate prior to starting the autotune. The autotune does <u>not</u> require the load to be removed from the motor, however the motor brake should be released providing it is safe to do so.**				
P4-03	**Vector Speed Controller Proportional Gain**	0.1	400.0	50.0	%
	Sets the proportional gain value for the speed controller when operating in Vector Speed or Vector Torque motor control modes (P4-01 = 0 or 1). Higher values provide better output frequency regulation and response. Too high a value can cause the speed to overshoot the setpoint during acceleration, and may also cause speed instability and possibly over current trips. For applications requiring best possible performance, the value should be adjusted to suit the connected load by gradually increasing the value and monitoring the actual output speed of the load until the required dynamic behaviour is achieved with little or no overshoot of the target speed during acceleration and deceleration. In general, higher friction loads can tolerate higher values of proportional gain, and high inertia, low friction loads may require the gain to be reduced.				
P4-04	**Vector Speed Controller Integral Time Constant**	0.000	2.000	0.100	Seconds
	Sets the integral time for the speed controller. Smaller values provide a faster response in reaction to motor load changes, at the risk of introducing instability. For best dynamic performance, the value should be adjusted to suit the connected load.				
P4-05	**Motor Power Factor Cos Ø**	0.00	0.99	-	-
	When operating in Vector Speed or Vector Torque motor control modes, this parameter must be set to the motor nameplate power factor before an autotune is carried out.				
P4-06	**Torque Control Reference / Limit Source**	0	5	0	-
	When P4-01 = 0, this parameter defines the source for the maximum output torque limit. When P4-01 = 1, this parameter defines the source for the torque reference (setpoint). **0 : Fixed Digital**. The torque controller reference / limit is set in P4-07 **1 : Analog Input 1**. The output torque is controlled based on the signal applied to Analog Input 1, whereby 100% input signal level will result in the drive output torque being limited by the value set in P4-07. **2 : Analog Input 2**. The output torque is controlled based on the signal applied to Analog Input 2, whereby 100% input signal level will result in the drive output torque being limited by the value set in P4-07. **3 : Fieldbus**. The output torque is controlled based on the signal from the communications Fieldbus, whereby 100% input signal level will result in the motor output torque being set or limited to motor rated torque. **4 : Master**. The output torque is controlled based on the signal from the Master when operating in Master / Slave mode. **5 : PID Controller Output**. The output torque is controlled based on the output of the PID controller, whereby 100% input signal level will result in the drive output torque being limited by the value set in P4-07.				
P4-07	**Maximum Motoring Torque Limit**	P4-08	500.0	150.0	%
	When operating in Vector Speed or Vector Torque motor control modes (P4-01 = 0 or 1), this parameter defines the maximum torque limit or reference used by the drive in conjunction with P4-06.				

Par.	Name	Minimum	Maximum	Default	Units
P4-08	**Minimum Motoring Torque Limit**	0.0	P4-07	0.0	%
	Active only in Vector Speed or Vector Torque motor control modes (P4-01 = 0 or 1). Sets a minimum torque limit, whereby the when the Optidrive is enabled, it will always attempt to maintain this torque on the motor at all times whilst operating.				
	NOTE : This parameter should be used with extreme care, as the drive output frequency will increase to achieve the torque level, and may exceed the selected speed reference				
P4-09	**Generator Mode Maximum Torque Limit (Maximum Regenerative Torque)**	0.0	500.0	100.0	%
	Active only in Vector Speed or Vector Torque motor control modes. Sets the maximum regenerating torque allowed by the Optidrive				
P4-10	**V/F Characteristic Adjustment Frequency**	0.0	100.0	0.0	%
	Entered as a percentage value of P1-09. When operating in V/F mode (P4-01 = 2), this parameter in conjunction with P4-11 sets a frequency point at which the voltage set in P4-11 is applied to the motor. Care must be taken to avoid overheating and damaging the motor when using this feature.				
P4-11	**V/F Characteristic Adjustment Voltage**	0.0	100.0	0.0	%
	Entered as a percentage of P1-07. Used in conjunction with parameter P4-10				
P4-12	**Motor Thermal Memory Retention**	0	1	0	-
	0 : Disabled. The present value of the motor overload accumulator is not stored during power off. **1 : Enabled.** The value of the motor thermal overload accumulator is stored during power off. Whilst the motor is being operated, the drive continuously monitors the output current over a time period, to determine the likely operating temperature of the motor. If the motor operates at high current for a period of time, the drive may trip to protect the motor and prevent damage. When this function is disabled (default setting), removing the power supply from the drive will result in the thermal overload value for the motor being reset to zero, hence the motor could potentially be operated and damaged. By enabling this parameter, even if the mains power is removed from the drive, the value is retained, and reused at the next power on, in order to avoid the risk of damage to the motor.				
P4-13	**Output Phase Sequence**	0	1	0	-
	0 : U, V, W. **1 : U, W, V.** Direction of motor rotation when operating in a forward direction will be reversed. **Note:** When an encoder is used, it may be necessary to reverse the encoder connections for correct operation if this parameter is changed.				

1.3.5. Parameter Group 5 – Communication Parameters

Par.	Name	Minimum	Maximum	Default	Units
P5-01	**Drive Fieldbus Address**	0	63	1	-
	Sets the fieldbus address for the Optidrive				
P5-02	**CAN Open Baud Rate**	125	1000	500	kbps
	Sets the baud rate when CAN Open communications are used				
P5-03	**Modbus RTU Baud Rate**	9.6	115.2	115.2	kbps
	Sets the baud rate when Modbus RTU communications are used				
P5-04	**Modbus Data Format**	-	-	-	-
	Sets the expected Modbus telegram data format as follows n- 1 : No Parity, 1 stop bit n-2 : No parity, 2 stop bits O- 1 : Odd parity, 1 stop bit E- 1 : Even parity, 1 stop bit				
P5-05	**Communications Loss Timeout**	0.0	5.0	2.0	Seconds
	Sets the watchdog time period for the communications channel for fieldbus systems where the drive must monitor for loss of communications with the network master, e.g. Modbus RTU. If a valid telegram is not received by the Optidrive within this time period, the drive will assume a loss of communications has occurred and react as selected below. Setting to zero disables the function.				
P5-06	**Communications Loss Action**	0	3	0	-
	Controls the behaviour of the drive following a loss of communications as determined by the above parameter setting. **0 : Trip & Coast To Stop** **1 : Ramp to Stop Then Trip** **2 : Ramp to Stop Only (No Trip)** **3 : Run at Preset Speed 8**				
P5-07	**Fieldbus Ramp Control**	0	1	0	-
	Selects whether the acceleration and deceleration ramps are control directly via the Fieldbus, or by internal drive parameters P1-03 and P1-04. **0 : Disabled**. Ramps are control from internal drive parameters **1 : Enabled**. Ramps are controlled directly by the Fieldbus				
P5-08	**Fieldbus Process Data Output Word 4 Select**	0	7	0	-
	When using an optional fieldbus interface, this parameter configures the parameter source for the 4th process data word transferred from the drive to the network master during cyclic communication. **0 : Output Torque** – 0 to 2000 = 0 to 200.0% **1 : Output Power** – Output power in kW to two decimal places, e.g. 400 = 4.00kW **2 : Digital Input Status** – Bit 0 indicates digital input 1 status, bit 1 indicates digital input 2 status etc. **3 : Analog Input 2 Signal Level** – 0 to 1000 = 0 to 100.0% **4 : Drive Heatsink Temperature** – 0 to 100 = 0 to 100°C **5 : User Register 1** **6 : User Register 2** **7 : P0-80 Value**				
P5-12	**Fieldbus Process Data Output Word 3 Select**	0	7	0	-
	When using an optional fieldbus interface, this parameter configures the parameter source for the 3rd process data word transferred from the drive to the network master during cyclic communications **0 : Motor current** – Output current to 1 decimal place, e.g. 100 = 10.0 Amps **1 : Power (x.xx kW)** Output power in kW to two decimal places, e.g. 400 = 4.00kW **2 : Digital input status** – Bit 0 indicates digital input 1 status, bit 1 indicates digital input 2 status etc. **3 : Analog Input 2 Signal Level** - 0 to 1000 = 0 to 100.0% **4 : Drive Heatsink Temperature** – 0 to 100 = 0 to 100°C **5 : User register 1** – User Defined Register 1 Value **6 : User register 2**– User Defined Register 1 Value **7 : P0-80 value** – User Selected data value – see section 0				
P5-13	**Fieldbus Process Data Input Word 4 Select**	0	1	0	-
	When using an optional fieldbus interface, this parameter configures destination for the 4th process data word received by the drive from the network master during cyclic communications **0 : Fieldbus Ramp Control** – This option must be selected if the drive acceleration and deceleration ramps are to be controlled from the fieldbus. P5-07 must also be set to 1 to enable this function. **1 : User register 4** – The value received by the drive in PDI 4 is transferred to User Register 4. This option allows the function of the process data word to be defined in Parameter Group 9. In this case, User Register 4 should not be written to within any Function Block code, although the value can be read. Refer to section 1.4 for further information.				

P5-14	**Fieldbus Process Data Input Word 3 Select**	0	2	0	-
	When using an optional fieldbus interface, this parameter configures destination for the 3rd process data word received by the drive from the network master during cyclic communications **0 : Torque limit/reference** – This option must be selected if the drive output torque limit / setpoint is to be controlled from the fieldbus. This also requires setting P4-06 = 3. **1 : User PID reference register** – This option allows the setpoint to the PID controller to be received from the Fieldbus. In order for this option to be used, P9-38 must be set to 1, and the PID User setpoint must not be utilised within any Function Block Code. **2 : User register 3** - The value received by the drive in PDI 3 is transferred to User Register 3. This option allows the function of the process data word to be defined in Parameter Group 9. In this case, User Register 3 should not be written to within any Function Block code, although the value can be read. Refer to section 1.4 for further information.				
P5-15	**Modbus Response Delay**	0	16	0	Chr
	Allows the user to configure an additional delay between the drive receiving a request via the Modbus RTU interface, and transmitting a reply. The value entered represents the delay in addition to the minimum delay permissible according to the Modbus RTU specification, and is expressed as the number of additional characters.				

1.3.6. Parameter Group 6 – Advanced Functions

Par.	Name	Minimum	Maximum	Default	Units
P6-01	**Enable Firmware Upgrade**	0	3	0	-
	Enables the firmware upgrade mode, allowing the User Interface firmware and/or the Power Stage Control firmware to be upgraded. Options are: **0 : Disabled** **1 : Upgrade User Interface and Power Stage Control firmware** **2 : Upgrade User Interface firmware only** **3 : Upgrade Power Stage Control firmware only** **NOTE** This parameter should not be adjusted by the User. The firmware upgrade process is carried out fully automatically using Optitools Studio PC software.				
P6-02	**Automatic Thermal Management Minimum Switching Frequency**	4	Model Dependent	4	kHz
	This parameter defines the minimum effective switching frequency which the drive will use. During operation, the drive measures the power module temperature and will switch automatically to a lower switching frequency if the temperature reaches a pre-defined limit. This parameter determines the lowest frequency that can be used. In the event that the power module temperature continues to increase, the drive will trip on over temperature.				
P6-03	**Auto Reset Time Delay**	1	60	20	s
	Sets the delay time which will elapse between consecutive drive reset attempts when Auto Reset is enabled in P2-36				
P6-04	**Relay Output Hysteresis Control**	0.0	25.0	0.3	-
	This parameter works in conjunction with P2-11 and P2-13 = 2 or 3 to set a band around the target speed (P2-11 = 2) or zero speed (P2-11 = 3). When the speed is within this band, the drive is considered to be at target speed or Zero speed. This function is used to prevent "chatter" on the relay output if the operating speed coincides with the level at which the digital / relay output changes state. e.g. if P2-13 = 3, P1-01 = 50Hz and P6-04 = 5%, the relay contacts close above 2.5Hz				
P6-05	**Encoder Speed Feedback Enable**	0	1	0	-
	0 : Disabled **1 : Enabled**. Setting to 1 enables encoder control mode of operation, which requires an optional encoder feedback interface. For correct operation, ensure that the encoder has been properly fitted to the motor and its wiring is connected to the encoder feedback module in accordance with the Encoder Feedback Interface User Guide. Before enabling this parameter, ensure that the sense of rotation is correct by using parameter P0-57 (encoder feedback speed) while running in V/f mode. The sign in P0-57 should match that of the speed reference.				
P6-06	**Encoder PPR**	0	65535	0	-
	When using the optional encoder feedback interface (OPT-2-ENCOD), this parameter should be set to the number of Pulses Per Revolution for the connected encoder. This value has to be set correctly to guarantee proper operation of the drive when Encoder feedback mode is enabled (P6-05 = 1). Improper setting of this parameter could cause the loss of control of the drive and / or a trip. If set to zero, encoder feedback will be disabled.				
P6-07	**Speed Error Trip Level**	0.0	100.0	5.0	%
	When operating in vector mode, this parameter defines the maximum permissible error between the commanded motor speed and the esitamed or measured motor speed. This provides protection against overspeeding or loss of motor control. If the speed error exceeds this limit, the drive will trip. When set to zero, this protection is disabled.				
P6-08	**Maximum Speed Reference Frequency**	0	20	0	kHz
	When the motor speed reference is to be controlled by a frequency input signal (connected to Digital input 3), this parameter is used to define the input frequency which corresponds to the maximum motor speed (set in P1-01). This maximum frequency that can be set in this parameter must be in the range 5kHz to 20kHz. When set to 0, this function is disabled.				
P6-09	**Speed Droop Control**	0.0	25.0	0.0	%
	This parameter only applies when the drive is in vector speed control mode. (P4-01=0, 3, 4,5, 6) When set to zero, the speed droop control function is disabled. If P6-09 > 0, this parameter effectively defines a slip speed at motor rated output torque. The droop speed is the percentage value of P1-09. Depending on the motor load condition, the reference speed will be reduced by a certain droop value before goes into speed controller, calculated as shown below: Droop speed = P6-09 * P1-09 Droop value = Droop speed * (Motor real torque / Motor rated torque) Speed controller input = Speed reference – Droop value Droop control can be used to provide a small reduction in motor speed in proportion to the applied load. This can be especially useful where multiple motors drive a common load, and the load should be shared evenly between the motors. The real time droop value may be viewed in P0-62.				
P6-10	**Enable Function Block Program Operation**	0	1	0	-
	0 : Function Block Program Disabled. **1 : Function Block Prgram Enabled**. This parameter must be set to 1 to enable any Function Block Program loaded into the drive to operate. When set to 0, the Function Block Program will be disabled.				
P6-11	**Speed Holding Time on Enable**	0	250	0	s
	Defines a time period for which the drive will run at Preset Speed 7 (P2-07) when the Enable signal is applied to the drive. The preset speed can be any value from minimum to maximum frequency and in either direction. This function can be useful in applications requiring controlled start-up behaviour regardless of the normal system operation, and allows the user to program the drive to always start at the same frequency, with the same direction of rotation for a specified time period before returning to normal operation.				

Par.	Name	Minimum	Maximum	Default	Units
P6-12	**Speed Holding / DC Injection Time on Disable**	0	250	0	s
	When P6-18 = 0, defines a time period for which the drive will run at Preset Speed 8 (P2-08) following removal of the Enable signal, before ramping to stop. **Note** Setting this parameter > 0 will result in the drive continuing to operate for the set time at the preset speed *after* the enable signal has been removed. It is important to ensure this method of operation is safe prior to using this function. When P6-18 > 0 and Hoist Mode is not enabled (P2-18 ≠ 8), a DC Current, which may be adjusted using P6-18 is injected into the motor for the time set by this parameter when stopping, which can be useful to ensure the motor has completely stopped.				
P6-13	**Hoist Mode : Brake Release Time**	0.0	5.0	0.2	s
	Sets the time for which the drive will hold at the Brake Release Speed (set in P2-07 - Preset Speed 7) to allow the motor brake to release.				
P6-14	**Hoist Mode : Brake Apply Time**	0.0	5.0	0.3 – 0.5	s
	Sets the time for which the drive will hold at the Brake Apply Speed (set in P2-08 - Preset Speed 8) to allow the motor brake to engage. For vertical hoist applications this value should not be set below the time required for the brake to engage (brake response time, as specified by the brake manufacturer). The minimum time is 0.1s.				
P6-15	**Hoist Mode : Brake Release Torque Threshold (Torque Prove)**	0.0	200.0	8.0	%
	Sets the torque level, as a % of the nominal motor torque, which must be generated prior to the drive Output Relay 2 closing to signal the motor holding brake to release. This is used to ensure the motor is connected and that sufficient torque has been generated to prevent the load dropping on release of the mechanical brake. The torque threshold function is not active in V/f mode.				
P6-16	**Hoist Mode : Torque Threshold Timeout**	0.0	25.0	5.0	s
	Sets the time for which, following a start command, the drive will attempt to apply enough torque to the motor to reach the hoist torque probe level (P6-15). Should the torque probe level not be reached within the set time the drive will trip.				
P6-17	**Maximum Torque Limit Timeout**	0.0	25.0	0.0	Hz/Rpm
	Sets the maximum time allowed for the motor to be operating at the motor/generator torque limit (P4-07/P4-09) before tripping. This parameter is enabled only for vector control operation.				
P6-18	**DC Injection Braking Current**	0.0	100.0	0.0	%
	Defines the DC current level as a percentage of motor rated current (P1-08) that is applied to the motor when a stop command is received and the DC Injection function is activated.				
P6-19	**Brake Resistor Resistance Value**	See Below	200	See Below	Ohms
	Sets the brake resistor value in Ohms. This value is used for the brake resistor thermal protection.				
P6-20	**Brake Resistor Power Rating**	0.00	200.00	See Below	kW
	Sets the brake resistor power in kW, with a resolution of 0.1kW. This value is used for the brake resistor thermal protection. The thermal protection allows 10 x P6-20 for 5 seconds within a 50 second period, or 50 x P6-20 for 1 second within 50s.				
P6-21	**Brake Chopper under Temperature Duty Cycle**	0.0	20.0	2.0	%
	This parameter defines the duty cycle applied to the brake chopper whilst the drive is in an under temperature trip state. A brake resistor can be mounted to the drive heat sink, and used to maintain the drive temperature above the minimum operating temperature. This parameter should be used with extreme care, as incorrect adjustment may result in exceeding the rated power capacity of the resistor. External thermal protection for the resistor should always be used to avoid this risk.				
P6-22	**Cooling Fan Runtime Counter Reset**	0	1	0	-
	0 : No Function **1 : Reset**. Setting to 1 resets the internal Fan run-time counter to zero (as displayed in Index 1 of P0-35).				
P6-23	**Energy Consumption (kWh) Meter Reset**	0	1	0	-
	0 : No Function **1 : Reset** . Setting to 1 resets internal kWh meter to zero (as displayed in Index 1 of P0-26 and Index 1 of P0-27).				
P6-24	**Maintenance Time Interval**	0	60000	0	Hours
	Allows the user to define a maintenance interval period for the application. This defines the total number of run time hours which must elapse before the service indicator is displayed. This may be viewed on the drive OLED display, may be programmed to a relay output, and also sets a bit in the drive status word. When P6-25 is set to 1, the internal service interval counter is set to this value				
P6-25	**Maintenance Time Reset**	0	1	0	-
	When this parameter is set to 1, the internal service interval counter is set to the value defined in P6-24				
P6-26	**Analog Output 1 Scaling**	0.0	500.0	100.0	%
	Defines the scaling factor as a % used for Analog Output 1				
P6-27	**Analog Output 1 Offset**	-500.0	500.0	0.0	%
	Defines the offset as a % used for Analog Output 1				
P6-28	**P0-80 Display Value Index**	0	200	0	-
	This parameter defines the index of the internal variable, the value of which will be displayed in P0-80. This is usually used in conjunction with the Function Block Program. Refer to section 1.6 for further information.				
P6-29	**Save User Parameters as Default**	0	2	0	-
	0 : No Function **1 : Save Parameters.** Setting this parameter to 1 saves the present drive parameter settings to the User Default Parameters Memory. Following this, if the User carries out a 3-button default parameter command (UP, DOWN and STOP), the parameter saved at this time will be restored. **2 : Erase Parameters**. Setting 2 clears the User Default Parameters Memory.				

Par.	Name	Minimum	Maximum	Default	Units
P6-30	**Advanced Parameter Access Code Definition**	0	9999	201	-
	Defines the access code which must be entered into P1-14 to allow access to the Advanced Parameters.				

1.3.7. Parameter Group 7 – Motor Data

The following parameters are used internally by the drive to provide optimum possible motor control. Incorrect setting of the parameters can result in poor performance and unexpected behaviour of the motor. Adjustments should only be carried out by experienced users who fully understand the functions of the parameters.

Par.	Name	Minimum	Maximum	Default	Units
P7-01	**Motor Stator Resistance (Rs)**	-	-	-	Ohms
	Motor stator resistance value measured during the autotune.				
P7-02	**Motor Rotor Resistance (Rr)**	-	-	-	Ohms
	For induction motors: phase to phase rotor resistance value in ohms.				
P7-03	**Motor Stator Inductance (Lsd)**	-	-	-	H
	For induction motors: phase stator inductance value. For permanent magnet motors: phase d-axis stator inductance in Henry (H).				
P7-04	**Motor Magnetising Current (Id rms)**	0.0	-	-	A
	For induction motors: magnetizing / no load current. Before Auto-tune, this value is approximated to 60% of motor rated current (P1-08), assuming a motor power factor of 0.8.				
P7-05	**Motor Leakage Coefficient (Sigma)**	-	-	-	-
	For induction motors: motor leakage inductance coefficient				
P7-06	**Motor Stator Inductance : PM Motors (Lsq)**	0	-	-	-
	For permanent magnet motors: phase d-axis stator inductance in Henry (H).				
P7-07	**Enhanced Generator Mode**	0	1	0	-
	Valid in vector control mode only, provides improved performance and control of the motor when operating in regenerative mode at low speed.				
P7-08	**Motor Parameter Adaptation Enable**	0	1	0	-
	0 : Disabled **1 : Enabled.** For Induction motors only and effective in vector control mode (P4-01 = 0 or 1), allows the stator resistance to be adapted during normal operation to compensate for increase in the moror temperature.				
P7-09	**Over Voltage Current Limit**	0.0	100.0	5.0	%
	Effective in vector speed control mode only, and will come into function once the drive DC bus voltage increases above a preset limit. This voltage limit is set internally just below the over voltage trip level. This parameter will effectively limit the output torque current in order to prevent a large current flowing back to the drive, which may cause an Over-voltage trip. A small value in this parameter will limit the motor control torque when the drive DC bus voltage exceeds the preset limit. A higher value may cause a significant distortion in the motor current, which may cause an aggressive, rough motor behaviour.				
P7-10	**System Inertia Constant**	0	600	10	-
	System Load Inertia to Motor Inertia Ratio entered as H = (JTot / JMot). This value can normally be left at the default value (10) and is used by the drive control algorithms as a feed-forward control variable to provide optimum torque current to accelerate the load. Hence accurate setting of the inertia ratio will produce a better system response and dynamic behaviour.				
P7-11	**Pulse Width Minimum Limit**	0	500	-	-
	This parameter is used to limit the minimum output pulse width, which can be used for long motor cable applications. Increasing the value of this parameter will reduce the risk of over-current trips, but will also reduce the maximum available output motor voltage.				
P7-12	**V/F Mode / PM Mode Magnetising Period**	0	5000	-	ms
	Defines the delay time between the output stage enabling at 0.0Hz prior to the output frequency beginning to ramp to accelerate the motor. In V/F mode, this allows time for the motor to correctly magnetise, and avoids possible over current trips that may occur if the output frequency begins to ramp before the motor flux has stabilised. In IM vector mode, this function is automatically handled through the vector control algorithm. In PM and BLDC modes, this time is again used, and provides the same function, allowing alignment of the rotor flux prior to accelerating the motor, and again can help avoid over current trips.				
P7-13	**Vector Speed Control Derivative Gain**	0.0	400.0	0.0	%
	Sets the differential gain (%) for the speed controller in vector mode operation.				
P7-14	**Low Frequency Torque Boost**	0.0	100.0	0.0	%
	Effective in all motor control modes, except V/F mode (P4-01 = 2), but primarily intended for use with synchronous motors. Allows a boost current to be applied at start-up and low frequency (limit defined by P7-15), as a percentage of the motor rated current (P1-08). Injecting some additional current into the motor at low speed helps to ensure that the rotor alignment is maintained, imrpoving operation of the motor at lower speeds. In order to determine the correct setting, run the drive at the lowest frequency required by the application and increase boost levels to provide both required torque and smooth operation whilst avoiding excessive current levels which may cause nuisance tripping.				
P7-15	**Torque Boost Frequency Limit**	0.0	50.0	0.0	%
	Frequency range for applied boost current (P7-14) as a % of motor rated frequency (P1-09). This sets the frequency cut-off point above which boost current is no longer applied to the motor.				

P7-16	**PM Motor Signal Injection Enable**	0	3	0	-
	Enables signal injection for use with PM motors. A high frequency signal is injected into the motor at a level defined by P7-17. The information derived from this signal is then used to determine the motor speed more accurately when operating at low or zero speed, improving operation without the need for a feedback encoder. **0: Disabled** **1: Enabled During Magnetizing Period** **2: Enabled During Low Speed Operation** **3: Enabled During Magnetizing Period and Low Speed Operation**				
P7-17	**PM Motor Signal Injection Level**	0.0	100	0	%
	Sets the signal level used during the signal injection function in P7-17. If the value is too high, the drive may trip with over current.				
P7-18	**Over Modulation Enable**	0	1	0	-
	0: Disabled **1 : Enabled.** When enabled, over modulation provides a small increase in the available output voltage from the drive, which can assist in applications where the supply voltage is too low to provide the required motor voltage, resulting in an increased motor current.				

1.3.8. Parameter Group 8 – Application Specific Parameters

Par.	Name	Minimum	Maximum	Default	Units
P8-01	**Acceleration Ramp 2**	0.00	See Below	5.0	s
	Sets the ramp rate for Acceleration Ramp 2. The time set in this parameter is defined as the time taken to ramp from 0 to the frequency set in P1-09. For Optidrive P2 units Frame Sizes 2 and 3, the parameter range is adjustable between 0.00 and 600.0 seconds For Optidrive P2 units Frame Sizes 4 and above, the parameter range is adjustable between 0.0 and 6000.0 seconds				
P8-02	**Speed Boundary Acceleration Ramp 1 -> 2**	0.0	P1-01	0.0	Hz
	Defines the speed boundary at which the Acceleration Ramp changes from Ramp 1 to Ramp 2.				
P8-03	**Acceleration Ramp 3**	0.00	See Below	5.0	s
	Sets the ramp rate for Acceleration Ramp 3. The time set in this parameter is defined as the time taken to ramp from 0 to the frequency set in P1-09 For Optidrive P2 units Frame Sizes 2 and 3, the parameter range is adjustable between 0.00 and 600.0 seconds For Optidrive P2 units Frame Sizes 4 and above, the parameter range is adjustable between 0.0 and 6000.0 seconds				
P8-04	**Speed Boundary Acceleration Ramp 2 -> 3**	0.0	P1-01	0.0	Hz
	Defines the speed boundary at which the Acceleration Ramp changes from Ramp 2 to Ramp 3				
P8-05	**Acceleration Ramp 4**	0.00	See Below	5.0	s
	Sets the ramp rate for Acceleration Ramp 4. The time set in this parameter is defined as the time taken to ramp from 0 to the frequency set in P1-09 For Optidrive P2 units Frame Sizes 2 and 3, the parameter range is adjustable between 0.00 and 600.0 seconds For Optidrive P2 units Frame Sizes 4 and above, the parameter range is adjustable between 0.0 and 6000.0 seconds				
P8-06	**Speed Boundary Acceleration Ramp 3 -> 4**	0.0	P1-01	0.0	Hz
	Defines the speed boundary at which the Acceleration Ramp changes from Ramp 3 to Ramp 4				
P8-07	**Deceleration Ramp 4**	0.00	See Below	5.0	s
	Sets the ramp rate for Deceleration Ramp 4. The time set in this parameter is defined as the time taken to ramp from the frequency set in P1-09 to 0 For Optidrive P2 units Frame Sizes 2 and 3, the parameter range is adjustable between 0.00 and 600.0 seconds For Optidrive P2 units Frame Sizes 4 and above, the parameter range is adjustable between 0.0 and 6000.0 seconds				
P8-08	**Speed Boundary Deceleration Ramp 4 -> 3**	0.0	P1-01	0.0	Hz
	Defines the speed boundary at which the Deceleration Ramp changes from Ramp 4 to Ramp 3.				
P8-09	**Deceleration Ramp 3**	0.00	See Below	5.0	s
	Sets the ramp rate for Deceleration Ramp 3. The time set in this parameter is defined as the time taken to ramp from the frequency set in P1-09 to 0. For Optidrive P2 units Frame Sizes 2 and 3, the parameter range is adjustable between 0.00 and 600.0 seconds For Optidrive P2 units Frame Sizes 4 and above, the parameter range is adjustable between 0.0 and 6000.0 seconds				
P8-10	**Speed Boundary Deceleration Ramp 3 -> 2**	0.0	P1-01	0.0	Hz
	Defines the speed boundary at which the Deceleration Ramp changes from Ramp 3 to Ramp 2.				
P8-11	**Deceleration Ramp 2**	0.00	See Below	5.0	s
	Sets the ramp rate for Deceleration Ramp 2. The time set in this parameter is defined as the time taken to ramp from the frequency set in P1-09 to 0 For Optidrive P2 units Frame Sizes 2 and 3, the parameter range is adjustable between 0.00 and 600.0 seconds For Optidrive P2 units Frame Sizes 4 and above, the parameter range is adjustable between 0.0 and 6000.0 seconds				
P8-12	**Speed Boundary Deceleration Ramp 2 -> 1**	0.0	P1-01	0.0	Hz
	Defines the speed boundary at which the Deceleration Ramp changes from Ramp 2 to Ramp 1				
P8-13	**Ramp Select Control**	0	1	0	-
	0 : Digital Inputs. When set to 0, Acceleration and Deceleration Ramps 1 (P1-03 and P1-04) only are selected, unless Parameter Group 9 configuration has been used to select alternate ramps. **1 : Speed Dependent.** When Set to 1, the Acceleration and Deceleration Ramps are selected according to the output frequency and parameters P8-01 - P8-12.				

1.3.9. Parameter Group 8 Function Overview

Parameter Group 8 allows for up to 4 separate Acceleration and 4 separate Deceleration times to be defined within the drive parameters. These acceleration ramps can then be selected based on the drive output frequency when the function is enabled in P8-13, or can be directly selected using parameter Group 9 – refer to section 1.4 for further information.

When P8-13 is set to 1, acceleration and deceleration ramps are selected based on the following :-
Output Frequency > P8-06 = Acceleration Ramp 4
Output Frequency> P8-04 AND < P8-06 = Acceleration Ramp 3
Output Frequency> P8-02 AND < P8-04 AND < P8-06 = Acceleration Ramp 2
Output Frequency< P8-02 AND < P8-04 AND < P8-06 = Acceleration Ramp 1

Output Frequency > P8-08 = Deceleration Ramp 4
Output Frequency> P8-10 AND <P8-08 = Deceleration Ramp 3
Output Frequency> P8-12 AND < P8-10 AND < P8-08 = Deceleration Ramp 2
Output Frequency< P8-12 AND < P8-10 AND < P8-08 = Deceleration Ramp 1

1.4. Parameter Group 9 – Programmable Logic Functions

Parameter Group 9 is intended to allow the user complete flexibility to control the behaviour of the drive in more complex applications which require specialised parameter settings to accomplish. The parameters contained within this group should be used carefully, and the user should ensure they are fully familiar with the operation of the drive and its control functions prior to making any adjustment to parameters contained within this group.

1.4.1. Parameter Group 9 Function Overview

Parameter Group 9 allows advanced programming of the drive, including user defined functions for the digital and analog inputs of the drive and control of the speed reference source.

Group 9 Consists of three types of parameters

Logic Source Selection	These can be used to select the source for programmable Digital signals internally within the drive
Data Source Selection	These can be used to select the source for programmable Analog signal sources within the drive
Function Enable Parameters	These are used to select whether drive functions are controlled by their usual parameter selection, or have user defined behaviour (e.g. controlled by a Function Block Program within the drive written by the user).

The following rules apply to parameter Group 9.

- Parameters P9-01 to P9-32 inclusive may only be changed when P1-13 = 0
- When the value of P1-13 is changed, all previous settings in Parameter Group 9 will be cleared, and new settings entered based on the P1-13 selection.

1.4.2. Logic Source Selection Parameters

Logic Source Selection parameters allow the user to directly define the source for a control function within the drive. These parameters can only be linked to digital values, which either enable or disable the function depending on their state.

Parameters defined as logic sources have the following range of possible settings:-

No.	Drive LED Display	Drive OLED Display	Function
0	OFF / SAFE	Off / Safe	Function permanently disabled, or where allowed, linked to the status of the STO inputs
1	d in- 1	Digital Input 1	Function linked to Digital Input 1 Status
2	d in-2	Digital Input 2	Function linked to Digital Input 2 Status
3	d in-3	Digital Input 3	Function linked to Digital Input 3 Status
4	d in-4	Digital Input 4	Function linked to Digital Input 4 (Analog Input 1) Status
5	d in-5	Digital Input 5	Function linked to Digital Input 5 (Analog input 2) Status
6	d in-6	Digital Input 6	Function linked to Digital Input 6 Status (Requires Extended I/O option)
7	d in-7	Digital Input 7	Function linked to Digital Input 7 Status (Requires Extended I/O option)
8	d in-8	Digital Input 8	Function linked to Digital Input 8 Status (Requires Extended I/O option)
9	AoUt- 1	Ana Output 1	Function linked to Analog Output 1 Status
10	AoUt-2	Ana Output 2	Function linked to Analog Output 2 Status
11	doUt- 1	Dig Output 1	Function linked to Relay Output 1 Status
12	doUt-2	Dig Output 2	Function linked to Relay Output 2 Status
13	doUt-3	Dig Output 3	Function linked to Relay Output 3 Status (Requires Extended I/O or Cascade Option)
14	doUt-4	Dig Output 4	Function linked to Relay Output 4 Status (Requires Cascade Option)
15	doUt-5	Dig Output 5	Function linked to Relay Output 5 Status (Requires Cascade Option)
16	On	ON	Function permanently enabled
17	USEr- 1	USEr 1	Function linked to User Register 1 (Function Block Program)
18	USEr-2	USEr2	Function linked to User Register 2 (Function Block Program)
19	USEr-3	USEr3	Function linked to User Register 3 (Function Block Program)
20	USEr-4	USEr4	Function linked to User Register 4 (Function Block Program)
21	USEr-5	USEr5	Function linked to User Register 5 (Function Block Program)
22	USEr-6	USEr6	Function linked to User Register 6 (Function Block Program)
23	USEr-7	USEr7	Function linked to User Register 7 (Function Block Program)
24	USEr-8	USEr8	Function linked to User Register 8 (Function Block Program)
25	USEr-9	USEr9	Function linked to User Register 9 (Function Block Program)

1.4.3. Data Source Selection Parameters

Data Source selection parameters define the signal source for analog signals used within the drive, or example speed and torque setpoints. These parameters can be linked to analog values within the drive.

Parameters defined as Data Sources have the following range of possible settings:-

Programmable Logic Source Selection Options				
No.	**Drive LED Display**	**Drive OLED Display**	**Setting**	**Reference Source**
0	A in- 1	Analog Input 1	Analog Input 1	Analog Input 1 Signal Level (P0-01)
1	A in-2	Analog Input 2	Analog Input 2	Analog Input 2 Signal Level (P0-02)
2	PrESEt	Preset Speed	Preset Speed	Selected Preset Speed
3	d-Pot	Keypad Speed	Keypad (Motorised Pot)	Keypad Speed Reference (P0-06)
4	P id	PID Speed	PID Controller Output	PID Controller Output (P0-10)
5	SUb-dr	Master Speed	Master Speed Reference	Master Speed Reference (Master / Slave Operation)
6	F-bUS	Fieldbus Speed	Fieldbus Speed Reference	Fieldbus Speed Reference PDI2
7	USEr	User Speed Ref	User Defined Speed Reference	User Defined Speed Reference (Function Block Program)
8	PULSE	Frequency Input	Frequency Input	Pulse Frequency Input Reference
9	PrE- 1	Preset Speed 1	Preset Speed 1	Preset Speed 1 P2-01
10	PrE-2	Preset Speed 2	Preset Speed 2	Preset Speed 2 P2-02
11	PrE-3	Preset Speed 3	Preset Speed 3	Preset Speed 3 P2-03
12	PrE-4	Preset Speed 4	Preset Speed 4	Preset Speed 4 P2-04
13	PrE-5	Preset Speed 5	Preset Speed 5	Preset Speed 5 P2-05
14	PrE-6	Preset Speed 6	Preset Speed 6	Preset Speed 6 P2-06
15	PrE-7	Preset Speed 7	Preset Speed 7	Preset Speed 7 P2-07
16	PrE-8	Preset Speed 8	Preset Speed 8	Preset Speed 8 P2-08

1.4.4. Parameter Group 9 Descriptions

Par.	Name	Minimum	Maximum	Default	Units
P9-01	**Enable Input Logic Source**				
	Defines the source of the Drive Enable function. This function must be provided by hardware, and is normally assigned to Digital Input 1, and allows a hardware enable signal to be utilised in situations where for example the Run Forward or Run Reverse commands are applied from external sources, e.g. Fieldbus control signals or a Function Block Program. **Logic 1 :** Drive operation is allowed **Logic 0 :** Drive stops using deceleration ramp time selected by P9-26 & P9-27				
P9-02	**Fast Stop Input Logic Source**				
	Defines the Source of the Fast Stop Input. In response to a Fast Stop command, the drive stops using the deceleration time set in P2-25. **Logic 1 :** Drive operation is allowed **Logic 0 :** Drive stops using the deceleration ramp time set in P2-25				
P9-03	**Run Forward Input Logic Source**				
	Defines the source of the Run Forward command. **Logic 1 :** Drive runs the motor in the forward direction of rotation **Logic 0 :** Drive stops using deceleration ramp time selected by P9-26 & P9-27				
P9-04	**Run Reverse Input Logic Source**				
	Defines the source of the Run Reverse command. **Logic 1 :** Drive runs the motor in the reverse direction of rotation **Logic 0 :** Drive stops using deceleration ramp time selected by P9-26 & P9-27 **Note** When both the Run Forward and Run Reverse commands are applied to the drive simultaneously, the drive executes a Fast Stop.				
P9-05	**Latch Function Enable Logic Source**	0	1	0	-
	0 : Disabled **1 : Enabled.** Enables the latching function of the digital inputs. The latching function allows momentary start signals to be used to start and stop the drive in either direction. In this case, the Enable Input Source (P9-01) must be linked to a normally closed / open to stop control source. This control source must be Logic '1' to allow the drive to start. The drive will then respond to momentary or pulse start and stop signals as defined in parameters P9-03 and P9-04.				
P9-06	**Reverse Input Logic Source**				
	Defines the source of the Reverse command, which reverses the direction of motor rotation. **Note** The Reverse input only takes effect when the drive is operating in a Forward direction. Therefore • Applying Run Forward & Reverse inputs simultaneously = Motor Runs Reverse • Applying Run Reverse and Reverse inputs simultaneously = Motor Runs Reverse				
P9-07	**Reset Input Logic Source**				
	Defines the source of the Reset command. **Logic 1 :** Faults are reset on a rising edge of the Reset command. **Logic 0 :** No effect				

Par.	Name	Minimum	Maximum	Default	Units
P9-08	**External Trip Input Logic Source**				
	Defines the source of the External Trip command. **Logic 1 :** Drive operation is allowed **Logic 0 :** Drive trips with fault External Trip				
P9-09	**Terminal Control Override Logic Source**				
	Defines the source of the command used to select Terminal Control operation of the drive. This parameter is effective only when P1-12 > 0, and allows terminal control to be selected to override the control source defined in P1-12. **Logic 1 :** Drive operation is controlled from the sources defined in parameters P9-02 to P9-07. **Logic 0 :** Drive command source selected by P1-12				
Note	The control sources to the drive are handled in the following order of priority, from Highest to Lowest :- • STO Circuit • External Trip • Fast Stop • Enable • Terminal Control Override • Run Forward / Run Reverse / Reverse • Reset				
P9-10	**Speed Setpoint 1 Data Source**				
P9-11	**Speed Setpoint 2 Data Source**				
P9-12	**Speed Setpoint 3 Data Source**				
P9-13	**Speed Setpoint 4 Data Source**				
P9-14	**Speed Setpoint 5 Data Source**				
P9-15	**Speed Setpoint 6 Data Source**				
P9-16	**Speed Setpoint 7 Data Source**				
P9-17	**Speed Setpoint 8 Data Source**				
Note	It is possible to define up to 8 speed setpoint sources for the drive, and to select them during operation using P9-18 – P9-20. When changing the setpoint source, the operation is effective immediately, and does not require the drive to stop and restart.				
P9-18	**Speed Reference Select Bit 0 Logic Source**				
P9-19	**Speed Reference Select Bit 1 Logic Source**				
P9-20	**Speed Reference Select Bit 2 Logic Source**				
Note	The active speed setpoint source can be selected during operation by the status of the above logic source parameters. The Speed setpoints are selected according to the following logic :-				

P9-20	P9-19	P9-18	Speed Setpoint Source
0	0	0	1 (P9-10)
0	0	1	2 (P9-11)
0	1	0	3 (P9-12)
0	1	1	4 (P9-13)
1	0	0	5 (P9-14)
1	0	1	6 (P9-15)
1	1	0	7 (P9-16)
1	1	1	8 (P9-17)

P9-21	**Preset Speed Select Bit 0 Logic Source**				
P9-22	**Preset Speed Select Bit 1 Logic Source**				
P9-23	**Preset Speed Select Bit 2 Logic Source**				
Note	When Preset Speeds are to be used for the speed setpoint, the active preset speed can be selected based on the status of these parameters. The selection is according to the following logic :-				

P9-23	P9-22	P9-21	Preset Speed
0	0	0	1 (P2-01)
0	0	1	2 (P2-02)
0	1	0	3 (P2-03)
0	1	1	4 (P2-04)
1	0	0	5 (P2-05)
1	0	1	6 (P2-06)
1	1	0	7 (P2-07)
1	1	1	8 (P2-08)

P9-24	**Acceleration Ramp Select Bit 0 Logic Source**				
P9-25	**Acceleration Ramp Select Bit 1 Logic Source**				
Note	These parameters allow alternative acceleration ramp times to be selected based on the status of the parameters above. In order to use the function, P8-13 must be 0 (default setting), otherwise the ramps are automatically selected based on output frequency. The acceleration ramp time is selected according to the following logic :-				

P9-25	P9-24	Acceleration Ramp Parameter
0	0	P1-03
0	1	P8-01
1	0	P8-03
1	1	P8-05

Par.	Name	Minimum	Maximum	Default	Units
P9-26	**Deceleration Ramp Select Bit 0 Logic Source**				
P9-27	**Deceleration Ramp Select Bit 1 Logic Source**				
Note	These parameters allow alternative deceleration ramp times to be selected based on the status of the parameters above. In order to use the function, P8-13 must be 0 (default setting), otherwise the ramps are automatically selected based on output frequency. The acceleration ramp time is selected according to the following logic :-				

P9-27	P9-26	Deceleration Ramp Parameter
0	0	P1-04
0	1	P8-11
1	0	P8-09
1	1	P8-07

Par.	Name	Minimum	Maximum	Default	Units
P9-28	**Remote (Keypad) Up Input Logic Source**				
	Defines the source of the logic signal used to increase the value of the Keypad / Motorised Pot speed reference. When the defined signal source is Logic 1, the value will increase at the rate defined by P1-03.				
P9-29	**Remote (Keypad) Down Input Logic Source**				
	Defines the source of the logic signal used to decrease the value of the Keypad / Motorised Pot speed reference. When the defined signal source is Logic 1, the value will decrease at the rate defined by P1-04.				
P9-30	**Speed Limit Switch Forward Input Logic Source**				
	Defines the source of the logic signal used to act as a forward speed limit switch. Once enabled, if the input signal source is logic 0 and the speed reference is greater than 0, the drive will Fast Stop.				
P9-31	**Speed Limit Switch Reverse Input Logic Source**				
	Defines the source of the logic signal used to act as a reverse speed limit switch. Once enabled, if the input signal source is logic 0 and the speed reference is less than 0, the drive will Fast Stop.				
P9-33	**Analog Output 1 Data Source Enable**	0	1	0	-
	0 : Analog Output 1 Function Set by P2-11 1 : Analog Output 1 Function Set by User Defined Digital Source 2 : Analog Output 1 Function set by User Defined Analog Source				
P9-34	**Analog Output 2 Data Source Enable**	0	1	0	-
	0 : Analog Output 1 Function Set by P2-13 1 : Analog Output 1 Function Set by User Defined Digital Source 2 : Analog Output 1 Function set by User Defined Analog Source				
P9-35	**Relay Output 1 Logic Source Enable**	0	1	0	-
	0 : Relay Output 1 Function Set by P2-15 1 : Relay Output 1 Function set by User Defined Source				
P9-36	**Relay Output 2 Logic Source Enable**	0	1	0	-
	0 : Relay Output 1 Function Set by P2-18 1 : Relay Output 1 Function set by User Defined Source				
P9-37	**Scaling Control Data Source Enable**	0	1	0	-
	0 : Scaling Control Data Source Set by P2-21 1 : Scaling Control by User Defined Source				
P9-38	**PID Setpoint Data Source Enable**	0	1	0	-
	0 : PID Setpoint Source Defined by P3-05 1 : PID Setpoint Source set by User Defined Source				
P9-39	**PID Feedback Data Source Enable**	0	1	0	-
	0 : PID Feedback Source Defined by P3-10 1 : PID Feedback Source set by User Defined Source				
P9-40	**Torque Reference Data Source Enable**	0	1	0	-
	0 : Torque Reference / Limit Source Set by P4-06 1 : Torque Reference User Defined Source				
P9-41	**Relay Output Option Module Logic Source Enable**	0	1	0	-
	0 : Option Module Output Relays Factory Preset Functions Assigned Factory Preset Functions are as follows :- Relay 3 (Extended I/O & Cascade Option Module) : Drive Healthy Relay 4 (Cascade Option Module) : Drive Tripped Relay 5 (Cascade Option Module) : Drive Running **1 : Relay Output 1 Function set by User Defined Source**				

1.5. Parameter Group 0 – Monitoring Parameters (Read Only)

Par	Description	Units
P0-01	**Analog Input 1 Applied Signal Level**	%
	Displays the signal level applied to analog input 1 (Terminal 6) after scaling and offsets have been applied.	
P0-02	**Analog Input 2 Applied Signal Level**	%
	Displays the signal level applied to analog input 2 (Terminal 10) after scaling and offsets have been applied.	
P0-03	**Digital Input Status**	-
	Displays the status of the drive inputs, starting with the left hand side digit = Digital Input 1 etc.	
P0-04	**Pre Ramp Speed Controller Reference**	Hz/Rpm
	Displays the set point reference input applied to the drive internal speed controller	
P0-05	**Torque Controller Reference**	%
	Displays the set point reference input applied to the drive internal torque controller	
P0-06	**Digital Speed Reference (Motorised Pot)**	Hz/Rpm
	Displays the value of the drive internal Motorised Pot (used for keypad) speed reference	
P0-07	**Fieldbus Communication Speed Reference**	Hz/Rpm
	Displays the setpoint being received by the drive from the currently active Fieldbus interface.	
P0-08	**PID Reference (Setpoint)**	%
	Displays the setpoint input to the PID controller.	
P0-09	**PID Feedback Level**	%
	Displays the Feedback input signal to the PID controller	
P0-10	**PID Controller Output**	%
	Displays the output level of the PID controller	
P0-11	**Applied Motor Voltage**	Volts
	Displays the instantaneous output voltage from the drive to the motor	
P0-12	**Output Torque**	%
	Displays the instantaneous output torque level produced by the motor	
P0-13	**Trip History Log**	-
	Displays the last four fault codes for the drive. Refer to section 0 for further information	
P0-14	**Motor Magnetising Current (Id)**	Amps
	Displays the motor magnetising Current, providing an auto tune has been successfully completed.	
P0-15	**Motor Rotor Current (Iq)**	Amps
	Displays the motor Rotor (torque producing) current, providing an auto tune has been successfully completed.	
P0-16	**DC Bus Voltage Ripple Level**	Volts
	Displays the level of ripple present on the DC Bus Voltage. This parameter is used by the Optidrive for various internal protection and monitoring functions.	
P0-17	**Motor Stator Resistance (Rs)**	Ohms
	Displays the measured motor stator resistance, providing an auto tune has been successfully completed.	
P0-18	**Motor Stator Inductance (Ls)**	H
	Displays the measured motor stator inductance, providing an auto tune has been successfully completed.	
P0-19	**Motor Rotor Resistance (Rr)**	Ohms
	Displays the measured motor rotor resistance, providing an auto tune has been successfully completed.	
P0-20	**DC Bus Voltage**	Volts
	Displays the instantaneous DC Bus Voltage internally within the drive	
P0-21	**Drive Temperature**	°C
	Displays the Instantaneous Heatsink Temperature measured by the drive	
P0-22	**Time Remaining to next service**	Hours
	Displays the number of hours remaining on the service time counter before the next service is due.	
P0-23	**Operating Time Accumulated With Heatsink Temperature Above 85°C**	HH:MM:SS
	Displays the amount of time in hours and minutes that the Optidrive has operated for during its lifetime with a heatsink temperature in excess of 85°C. This parameter is used by the Optidrive for various internal protection and monitoring functions.	
P0-24	**Operating Time Accumulated With Ambient Temperature Above 80°C**	HH:MM:SS
	Displays the amount of time in hours and minutes that the Optidrive has operated for during its lifetime with an ambient temperature in excess of 80°C. This parameter is used by the Optidrive for various internal protection and monitoring functions.	
P0-25	**Rotor Speed (Estimated or Measured)**	Hz / Rpm
	In Vector control mode, this parameter displays the estimated rotor speed of the motor if no encoder feedback is present, or the measured rotor speed if an optional Encoder Feedback Interface Option is fitted.	
P0-26	**Energy Consumption kWh Meter**	kWh
	Displays the amount of energy consumed by the drive in kWh. When the value reaches 1000, it is reset back to 0.0, and the value of P0-27 (*MWh meter) is increased. This parameter contains 2 values. The first value, visible when entering the parameter, is the User Resettable kWh meter, which can be reset by setting P6-23 = 1. The second value cannot be reset by the user, and indicates the energy consumed by the drive when operating since the date of manufacture.	

Par	Description	Units
P0-27	**Energy Consumption MWh Meter**	MWh
	Displays the amount of energy consumed by the drive in MWh. This parameter contains 2 values. The first value, visible when entering the parameter, is the User Resettable MWh meter, which can be reset by setting P6-23 = 1. The second value cannot be reset by the user, and indicates the energy consumed by the drive when operating since the date of manufacture.	
P0-28	**Software Version and Checksum**	-
	Displays the software version of the drive	
P0-29	**Drive Type**	
	Displays the type details of the drive	
P0-30	**Drive Serial Number**	
	Displays the unique serial number of the drive.	
P0-31	**Drive Lifetime Operating Time**	HH:MM:SS
	Displays the total operating time of the drive. The first value shown is the number of hours. Pressing the Up key will display the minutes and seconds.	
P0-32	**Drive Run Time Since Last Trip (1)**	HH:MM:SS
	Displays the total operating time of the drive since the last fault occurred. The first value shown is the number of hours. Pressing the Up key will display the minutes and seconds.	
P0-33	**Drive Run time Since Last Trip (2)**	HH:MM:SS
	Displays the total operating time of the drive since the last fault occurred. The first value shown is the number of hours. Pressing the Up key will display the minutes and seconds.	
P0-34	**Drive Run Time Since Last Disable**	HH:MM:SS
	Displays the total operating time of the drive since the last Run command was received. The first value shown is the number of hours. Pressing the Up key will display the minutes and seconds.	
P0-35	**Drive Internal Cooling Fan Total Operating Time**	HH:MM:SS
	Displays the total operating time of the Optidrive internal cooling fans. The first value shown is the number of hours. Pressing the Up key will display the minutes and seconds. This is used for scheduled maintenance information	
P0-36	**DC Bus Voltage Log (256ms)**	Volts
P0-37	**DC Bus Voltage Ripple Log (20ms)**	Volts
P0-38	**Heatsink Temperature Log (30s)**	°C
P0-39	**Ambient Temperature Log (30s)**	°C
P0-40	**Motor Current Log (256ms)**	Amps
	The above parameters are used to store the history of various measured levels within the drive at various regular time intervals prior to a trip. The values are frozen when a fault occurs and can be used for diagnostic purposes – see section for further information.	
P0-41	**Critical Fault Counter – Over Current**	-
P0-42	**Critical fault counter – Over Voltage**	-
P0-43	**Critical fault counter – Under Voltage**	-
P0-44	**Critical fault counter – Over Temperature**	-
P0-45	**Critical fault counter – Brake Transistor Over Current**	-
P0-46	**Critical fault counter – Ambient Over Temperature**	-
	These parameters contain a record of how many times certain critical faults have occurred during a drives operating lifetime. This provides useful diagnostic data	
P0-47	**I/O Processor Error Count**	-
P0-48	**DSP Error Count**	-
	Displays the relevant internal error count for the drive processors, sueful for diagnostics.	
P0-49	**Modbus RTU Communication Error Counter**	-
	This parameter is incremented every time an error occurs on the Modbus RTU communication link. This information can be used for diagnostic purposes.	
P0-50	**CAN Open Communication Error Counter**	-
	This parameter is incremented every time an error occurs on the CAN Open communication link. This information can be used for diagnostic purposes.	
P0-51	**PDI Cyclic Data**	-
	Displays the incoming PDI processor data when a fieldbus interface is connected and operating that supports process data interchange, useful for fieldbus diagnostics and trouble shooting.	
P0-52	**PDO Cyclic Data**	-
	Displays the outgoing PDO processor data when a fieldbus interface is connected and operating that supports process data interchange, useful for fieldbus diagnostics and trouble shooting.	
P0-53	**Current Phase U Offset and Ref**	-
	Index 1 : Reference Index 2 : Sampled Value	
P0-54	**Current Phase V Offset and Ref**	-
	Index 1 : Reference Index 2 : Sampled Value	
P0-56	**Brake Max On Time and Duty Cycle**	-
	Index 1 : Max On Time Index 2 : Duty	

Par	Description	Units
P0-57	**Ud / uq**	-
	Index 1 : Ud Index 2 : Uq	
P0-58	**Encoder Feedback Speed Value**	Hz / Rpm
P0-59	**Frequency Input Reference**	
	Displays the speed setpoint when a frequency input is used for the speed reference.	
P0-60	**Calculated Slip Speed Value (V/F Mode Only)**	-
	When slip compensation is enabled using P1-10, the calculated motor slip is displayed here. The raw value is displayed from internal measurement, and does not directly represent Hz or Rpm.	
P0-61	**Relay Control Speed Hysteresis Value**	Hz / Rpm
	Displays the speed hysteresis value in use for output relay settings that use hysteresis, defined by P6-04.	
P0-62	**Droop Speed**	-
	Displays the droop speed when droop control is used. The raw value is displayed from internal measurement, and does not directly represent Hz or Rpm.	
P0-63	**Post Ramp Speed Reference**	Hz / Rpm
	Displays the speed reference after all ramps and limits are applied.	
P0-64	**Internal Effective Switching Frequency**	kHz
	Shows the effective switching frequency presently active.	
P0-65	**Drive Life Time**	HH:MM:SS
	Displays the total time for which the drive has been powered on. The value is not resettable.	
P0-66	**Function Block Program ID**	-
	Displays the ID of any internally loaded Function Block Program.	
P0-67	**Fieldbus Torque Reference**	-
	Displays the value of the torque reference received via a connected fieldbus interface if one is present. The value shown is the internal value, and does not directly represent Nm or %.	
P0-68	**User Ramp Value**	s
	Displays the "User Ramp Time" value, which may be set via the internal Function Block Program.	
P0-69	**I2C Error Count**	
P0-70	**Option Module Type**	
	Displays the type of option module fitted in the drive option slot. The displayed values are PL-Enc : Incremental Encoder Interface PL-EIO : Extended I/O or Cascade Module PL-bUS : Fieldbus Interface PL-UnF : No Module Fitted PL-UnA : Unkown or onrecognised Module	
P0-71	**Fieldbus Interface Type**	
	Displays the type of option module, if fitted in the drive option slot. The displayed values are n.A : No Filedbus Module ProF-b : Profibus Module fitted dE-nEt : DeviceNet Module fitted Eth-IP : Ethernet IP Module fitted	
P0-72	**Ambient Temperature**	°C
	Internal Value	
P0-73	**24 Hour Timer**	HH:MM
	Internal Value	
P0-74	**L1 – L2 Input Voltage**	Volts
	Displays the supply voltage measured between L1 and L2 terminals, for indication to the user	
P0-75	**L2 – L3 Input Voltage**	Volts
	Displays the supply voltage measured between L2 and L3 terminals, for indication to the user	
P0-76	**L3 – L1 Input Voltage**	Volts
	Displays the supply voltage measured between L3 and L1 terminals, for indication to the user	
P0-77	**Test Parameter**	-
	Internal Value	
P0-78	**Test Parameter**	-
	Internal Value	
P0-79	**Motor Control & DSP Version**	-
	Internal Value	
P0-80	**User Defined Internal Parameter**	-
	Internal Value. Refer to section 1.6 for further information.	

1.6. P6-28 Value Selection

Parameter P6-28 allows the user to select an internal register which can then be displayed in parameter P0-80.
To display any value from the list below, enter the corresponding index value in to P6-28.
E.g. setting P6-28 = 48 reads out the 24hour timer value in P0-80

Note that any of these variables can also be read out via the plug-in Fieldbus modules by setting PDO-3 or PDO-4 to P0-80 – see section 1.3.5.

Address	Function Description	R/W	Remark		Address	Function Description	R/W	Remark
0	Off condition	R	Binary		81	Motor speed	R	Data
1	Digital input 1	R	Binary		82	Motor current	R	Data
2	Digital input 2	R	Binary		83	Motor torque	R	Data
3	Digital input 3	R	Binary		84	Motor power	R	Data
4	Digital input 4	R	Binary		85	PID speed reference	R	Data
5	Digital input 5	R	Binary		86	DC bus voltage	R	Data
6	Digital input 6	R	Binary		87	Drive temperature	R	Data
7	Digital input 7	R	Binary		88	AMB temperature	R	Data
8	Digital input 8	R	Binary		89	Scaling display value 1	R	Data
9	Analog output 1	R	Data		90	Scaling display value 2	R	Data
10	Analog output 2	R	Data		91	Reserved	R	
11	Digital output 1	R	Binary		92	Reserved	R	
12	Digital output 2	R	Binary		93	Extension IO input	R	Data
13	Digital output 3	R	Binary		94	Reserved	R	
14	Digital output 4	R	Binary		95	Reserved	R	
15	Digital output 5	R	Binary		96	Plug-In module ID	R	Data
16	On condition	R	Binary		97	Anybus module type ID	R	Data
17	User register 1 (RAM)	RW	Binary/Data		98	Anybus module error	R	Data
18	User register 2 (RAM)	RW	Binary/Data		99	Anybus status	R	Data
19	User register 3 (RAM)	RW	Binary/Data		100	Reserved	R	Data
20	User register 4 (RAM)	RW	Binary/Data		101	Scope channel 1 data	R	Data
21	User register 5 (RAM)	RW	Binary/Data		102	Scope channel 2 data	R	Data
22	User register 6 (RAM)	RW	Binary/Data		103	Scope channel 3 data	R	Data
23	User register 7 (RAM)	RW	Binary/Data		104	Scope channel 4 data	R	Data
24	User register 8 (RAM)	RW	Binary/Data		105	OLED language index	R	Data
25	User register 9 (RAM)	RW	Binary/Data		106	OLED display version	R	Data
26	User register 10 (RAM)	RW	Binary/Data		107	Reserved	R	
27	User register 11 (RAM)	RW	Binary/Data		108	Drive Rating ID	R	Data
28	User register 12 (RAM)	RW	Binary/Data		…	Reserved	R	
29	User register 13 (RAM)	RW	Binary/Data		119	FS8 Stir Fan Speed	R	Data
30	User register 14 (RAM)	RW	Binary/Data		…			
31	User register 15 (RAM)	RW	Binary/Data		123	Function Block Program Cycle Time	R	Data
32	User analog output 1	RW	Data		124	Function Block Program ID	R	Data
33	User analog output 2	RW	Data		…	Reserved	R	
34	Reserved	RW	Data		130	kWh meter (user resettable)	R	Data
35	Reserved	RW	Data		131	MWh meter (user resettable)	R	Data
36	User relay/digital output 1	RW	Binary		132	kWh meter (fixed)	R	Data
37	User relay/digital output 2	RW	Binary		133	MWh meter (fixed)	R	Data
38	User relay/digital output 3	RW	Binary		134	Total run hour	R	Data
39	User relay/digital output 4	RW	Binary		135	Total run minutes and seconds	R	Data
40	User relay/digital output 5	RW	Binary		136	Run hour since last enable	R	Data
41	User scaling value	RW	Data		137	Run min/sec since last enable	R	Data
42	User scaling decimal	RW	Data		…	Reserved	R	
43	User speed reference	RW	Data		143	Real time clock second	R	Data
44	User torque reference	RW	Data		144	Real time clock minute	R	Data
45	User/fieldbus ramp reference	RW	Data		145	Real time clock hour	R	Data
46	Scope index 1/2	RW	Data		146	Real time clock weekday	R	Data
47	Scope index 3/4	RW	Data		147	Real time clock day	R	Data
48	24hour timer clock (hh:mm)	RW	Data		148	Real time clock month	R	Data
49	User display control register	RW	Data		149	Real time clock year	R	Data
50	User display value register	RW	Data		…	Reserved	R	
…	Reserved	RW			185	User register 16 (RAM)	RW	Binary/Data
61	Analog input 1 (Q12)	R	Data		186	User register 17 (RAM)	RW	Binary/Data
62	Analog input 1 (%)	R	Data		187	User register 18 (RAM)	RW	Binary/Data
63	Analog input 2 (Q12)	R	Data		188	User register 19 (RAM)	RW	Binary/Data
64	Analog input 2 (%)	R	Data		189	User register 20 (RAM)	RW	Binary/Data
65	Digital input status (1~5)	R	Data		190	User register21 (RAM)	RW	Binary/Data
66	Speed reference	R	Data		191	User register 22 (RAM)	RW	Binary/Data
67	Digital speed pod	R	Data		192	User register 23 (RAM)	RW	Binary/Data
68	Field bus speed reference	R	Data		193	User register 24 (RAM)	RW	Binary/Data
69	Master speed reference	R	Data		194	User register 25 (RAM)	RW	Binary/Data
70	Slave speed reference	R	Data		195	User register 26 (RAM)	RW	Binary/Data
71	Frequency speed reference	R	Data		196	User register 27 (RAM)	RW	Binary/Data
72	Torque reference (Q12)	R	Data		197	User register 28 (RAM)	RW	Binary/Data
73	Torque reference (%)	R	Data		198	User register 29 (RAM)	RW	Binary/Data
74	Master torque reference	R	Data		199	User register 30 (RAM)	RW	Binary/Data
75	Fieldbus torque reference	R	Data		200	User register 31 (RAM)	RW	Binary/Data
76	PID user reference	R	Data					
77	PID user feedback	R	Data					
78	PID reference	R	Data					
79	PID feedback	R	Data					
80	PID output	R	Data					

1.7. Control Terminal Connections

For standard applications and operation, the basic control of the drive and functions of all drive input terminals can be configured using just two parameters, P1-12 and P1-13. P1-12 is used to define the source of all control commands and the primary speed reference source. P1-13 then allows fast selection of Analog and Digital Input functions based on a selection table.
For applications which require a combination of control source and input functions which are not available using the standard approach, control sources can be manually configured in Parameter Group 9. To enable this User Defined function, both P1-12 and P1-13 must be set to 0. Parameter Group 9 is described in section 1.4.

1.7.1. P1-12 Function

P1-12 is used to select the main control source of the drive and the main speed reference according to the following table

P1-12	Function	Control Source	Main Speed Reference	Notes
0	Terminal Control	Terminals	Analog Input 1	
1	Keypad Control	Keypad / Terminals	Motorised Pot / Keypad	When keypad mode is selected, the default operation of the drive requires the keypad Start & Stop buttons are used to control the drive. This can be changed using P2-37 to allow the drive to be started from Digital Input 1 directly.
2	Keypad Control	Keypad / Terminals	Motorised Pot / Keypad	
3	Terminal Control PID	Terminals	PID Controller	
4	Fieldbus Control	Fieldbus Interface		Fieldbus refers to the on-board Modbus RTU connection via the built in RJ45 connection or the optional Fieldbus Plug in modules. If no module is fitted, the drive responds to the Modbus RTU interface. If a fieldbus Interface is fitted, Modbus RTU communication is disabled, and the drive responds to control inputs from the Fieldbus.
5	Slave Mode	From Master Drive	From Master Drive	
6	CAN bus	CAN bus	CAN Bus	

1.7.2. P1-13 Function

P1-13 is used to select a pre-assigned list of functions to the digital inputs. These factory set assignments are designed to cater for the majority of standard applications.

P1-13 = 0

Input functions defined in Parameter Group 9. See section 1.4

P1-13 = 1

Open	Closed
Stop	Run
Forward Rotation	Reverse Rotation
Selected Speed Reference	Preset Speed Reference
Analog Input 1	
Preset Speed 1	Preset Speed 2
Safe Torque OFF inputs Contacts must be closed to operate drive	

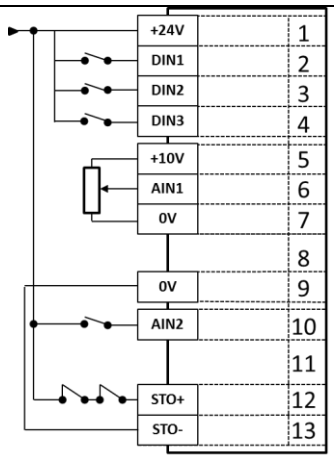

P1-13 = 2

Open	Closed
Stop	Run
Forward Rotation	Reverse Rotation
Preset Speed Reference Selected as follows:-	

DIN3	AIN1	AIN2	Preset
OFF	OFF	OFF	P2-01
ON	OFF	OFF	P2-02
OFF	ON	OFF	P2-03
ON	ON	OFF	P2-04
OFF	OFF	ON	P2-05
ON	OFF	ON	P2-06
OFF	ON	ON	P2-07
ON	ON	ON	P2-08

Safe Torque OFF inputs
Contacts must be closed to operate drive

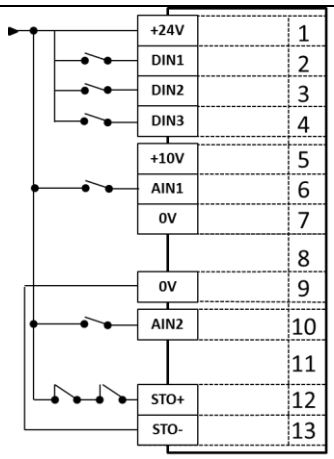

P1-13 = 3

Open	Closed
Stop	Run
Forward Rotation	Reverse Rotation
Selected Speed Reference	Preset Speed 1
Analog Input 1	
Analog Input 2 (E.g. Torque Reference)	
Safe Torque OFF inputs Contacts must be closed to operate drive	

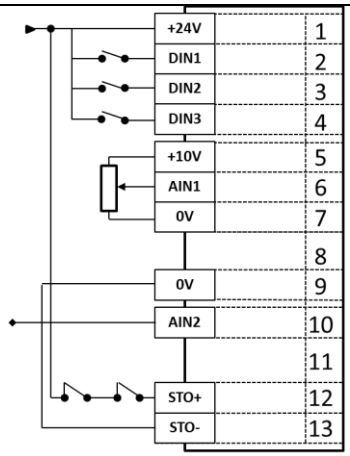

P1-13 = 4

Open	Closed
Stop	Run
Forward Rotation	Reverse Rotation
Selected Speed Reference	Preset Speed 1
Analog Input 1	
Decel ramp 1 (P1-04)	Decel Ramp 2 (P8-11)
Safe Torque OFF inputs Contacts must be closed to operate drive	

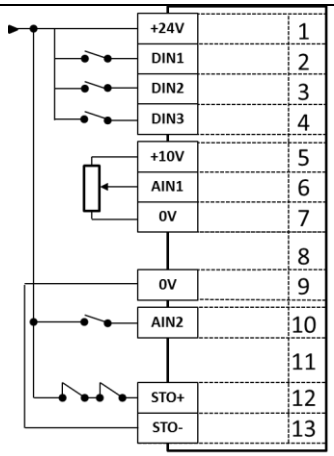

P1-13 = 5

Open	Closed
Stop	Run
Forward Rotation	Reverse Rotation
Selected Speed Reference	Analog Input 2 Speed Reference
Analog Input 1	
Analog Input 2	
Safe Torque OFF inputs Contacts must be closed to operate drive	

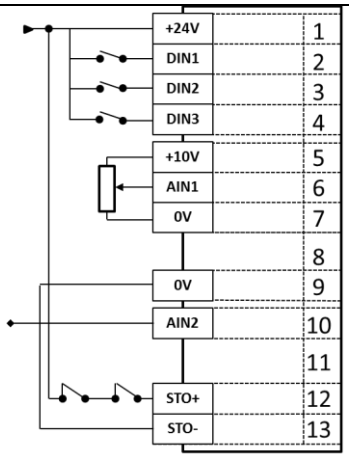

P1-13 = 6

Open	Closed
Stop	Run
Forward Rotation	Reverse Rotation
Selected Speed Reference	Preset Speed 1
Analog Input 1	
External Trip	
Safe Torque OFF inputs Contacts must be closed to operate drive	

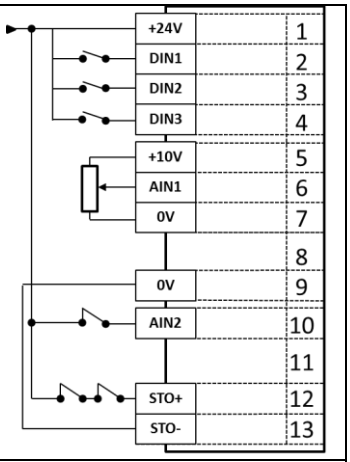

P1-13 = 7

Open	Closed
Stop	Run
Forward Rotation	Reverse Rotation
Preset Speed Reference Selected as follows:-	

DIN3	AIN1	Preset
OFF	OFF	P2-01
ON	OFF	P2-02
OFF	ON	P2-03
ON	ON	P2-04

External Trip
Safe Torque OFF inputs Contacts must be closed to operate drive

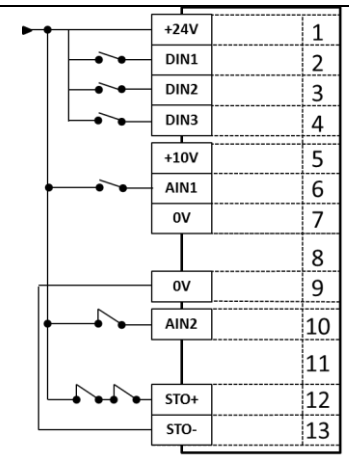

P1-13 = 8

Open	Closed
Stop	Run
Forward Rotation	Reverse Rotation
Preset Speed Reference Selected as follows:-	

DIN3	AIN1	Preset
OFF	OFF	P2-01
ON	OFF	P2-02
OFF	ON	P2-03
ON	ON	P2-04

Decel ramp 1 (P1-04)	Decel Ramp 2 (P2-25)
Safe Torque OFF inputs Contacts must be closed to operate drive	

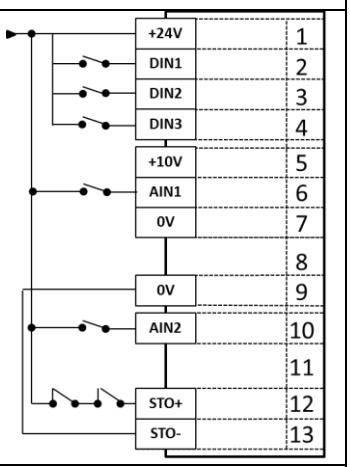

P1-13 = 9

Open	Closed
Stop	Run
Forward Rotation	Reverse Rotation
Preset Speed Reference Selected as follows:-	

DIN3	AIN1	Preset
OFF	OFF	P2-01
ON	OFF	P2-02
OFF	ON	P2-03
ON	ON	P2-04

Selected Speed Reference	Preset Speeds Reference 1 - 4
Safe Torque OFF inputs Contacts must be closed to operate drive	

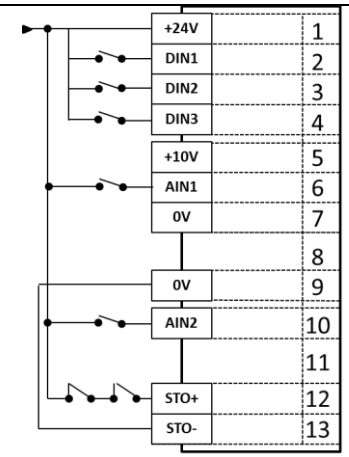

P1-13 = 10

Open	Closed
Stop	Run
Forward Rotation	Reverse Rotation
	Increase Speed[1)]
	Decrease Speed[1)]
Selected Speed Reference	Preset Speed 1
Safe Torque OFF inputs Contacts must be closed to operate drive	

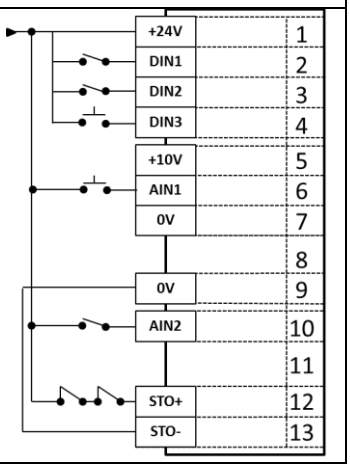

1) Increase / Decrease speed function only works if the Selected Speed reference is the Motorised Pot (P1-12 = 1 or 2)

P1-13 = 11

Open	Closed
Stop	Run Forward
Stop	Run Reverse
Selected Speed Reference	Preset Speed Reference
Analog Input 1	
Preset Speed 1	Preset Speed 2
Safe Torque OFF inputs Contacts must be closed to operate drive	

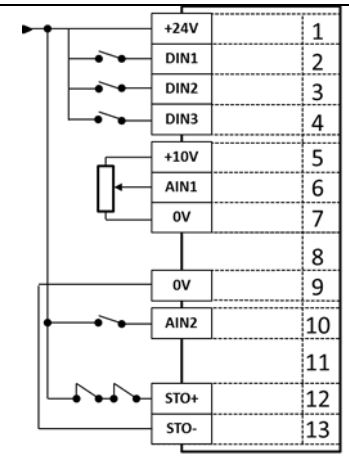

P1-13 = 12

Open	Closed
Stop	Run Forward
Stop	Run Reverse
Preset Speed Reference Selected as follows:-	

DIN3	AIN1	AIN2	Preset
OFF	OFF	OFF	P2-01
ON	OFF	OFF	P2-02
OFF	ON	OFF	P2-03
ON	ON	OFF	P2-04
OFF	OFF	ON	P2-05
ON	OFF	ON	P2-06
OFF	ON	ON	P2-07
ON	ON	ON	P2-08

Safe Torque OFF inputs Contacts must be closed to operate drive

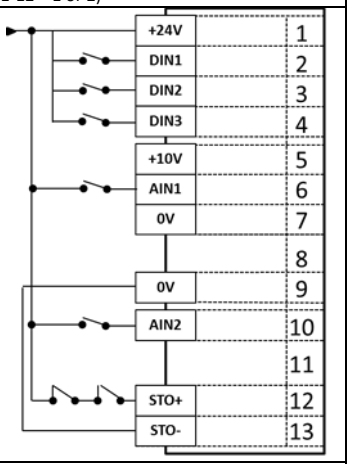

P1-13 = 13

Open	Closed
Stop	Run Forward
Stop	Run Reverse
Selected Speed Reference	Preset Speed 1
Analog Input 1	
Analog Input 2 (E.g. Torque Reference)	
Safe Torque OFF inputs Contacts must be closed to operate drive	

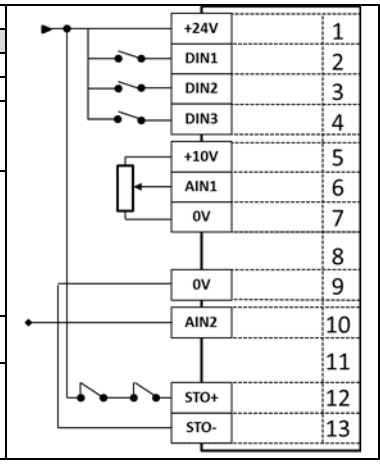

P1-13 = 14

Open	Closed
Stop	Run Forward
Stop	Run Reverse
Selected Speed Reference	Preset Speed 1
Analog Input 1	
Decel ramp 1 (P1-04)	Decel Ramp 2 (P8-11)
Safe Torque OFF inputs Contacts must be closed to operate drive	

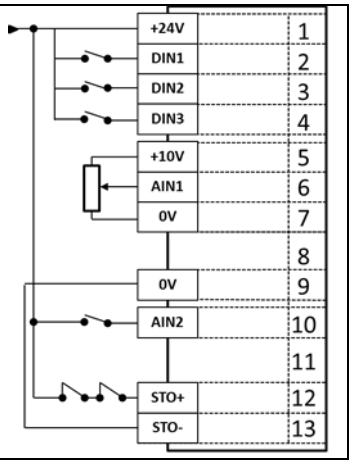

P1-13 = 15

Open	Closed
Stop	Run Forward
Stop	Run Reverse
Selected Speed Reference	Analog Input 2 Speed Reference
Analog Input 1	
Analog Input 2	
Safe Torque OFF inputs Contacts must be closed to operate drive	

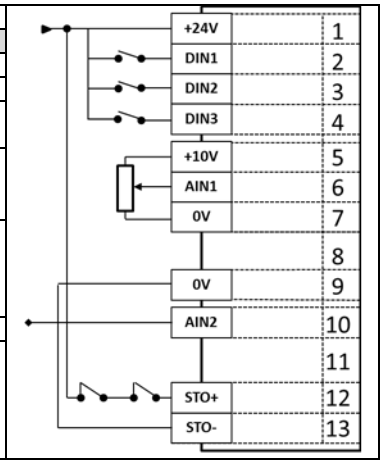

P1-13 = 16

Open	Closed
Stop	Run Forward
Stop	Run Reverse
Selected Speed Reference	Preset Speed 1
Analog Input 1	
External Trip	
Safe Torque OFF inputs Contacts must be closed to operate drive	

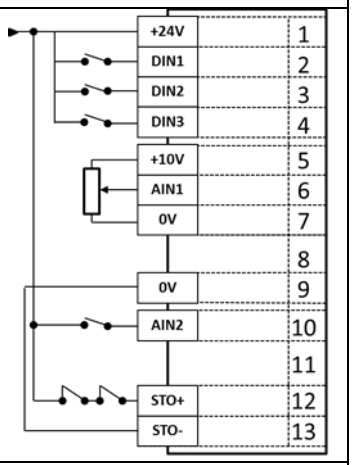

P1-13 = 17

Open	Closed
Stop	Run Forward
Stop	Run Reverse
Preset Speed Reference Selected as follows:-	

DIN3	AIN1	Preset
OFF	OFF	P2-01
ON	OFF	P2-02
OFF	ON	P2-03
ON	ON	P2-04

External Trip	
Safe Torque OFF inputs Contacts must be closed to operate drive	

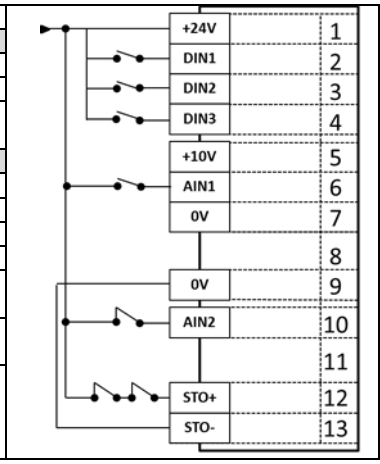

P1-13 = 18

Open	Closed
Stop	Run Forward
Stop	Run Reverse
Preset Speed Reference Selected as follows:-	

DIN3	AIN1	Preset
OFF	OFF	P2-01
ON	OFF	P2-02
OFF	ON	P2-03
ON	ON	P2-04

Decel ramp 1 (P1-04)	Decel Ramp 2 (P2-25)
Safe Torque OFF inputs Contacts must be closed to operate drive	

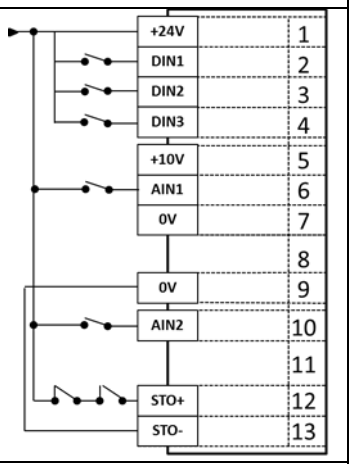

P1-13 = 19

Open	Closed
Stop	Run Forward
Stop	Run Reverse
Preset Speed Reference Selected as follows:-	

DIN3	AIN1	Preset
OFF	OFF	P2-01
ON	OFF	P2-02
OFF	ON	P2-03
ON	ON	P2-04

Selected Speed Reference	Preset Speeds Reference 1 - 4
Safe Torque OFF inputs Contacts must be closed to operate drive	

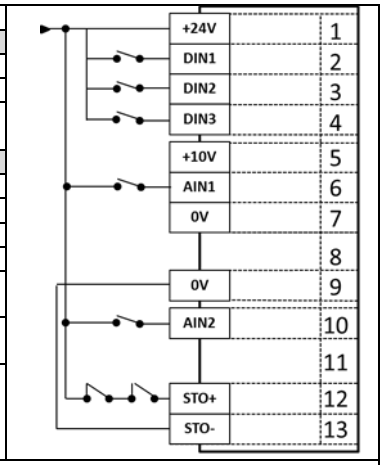

P1-13 = 20

Open	Closed
Stop	Run Forward
Stop	Run Reverse
	Increase Speed[1)]
	Decrease Speed[1)]
Selected Speed Reference	Preset Speed 1
Safe Torque OFF inputs Contacts must be closed to operate drive	

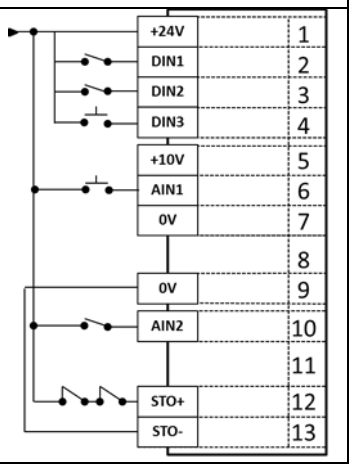

1) Increase / Decrease speed function only works if the Selected Speed reference is the Motorised Pot (P1-12 = 1 or 2)

P1-13 = 21	
Open	**Closed**
N.O. Contact - Start Forward	
N.C. Closed Contact – Stop	
N.O. Contact – Start Reverse	
Analog Input 1	
Selected Speed Reference	Preset Speed 1
Safe Torque OFF inputs Contacts must be closed to operate drive	

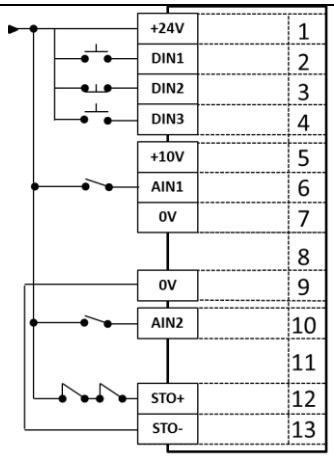

2. Drive Model Specific Parameter Variations

2.1. Available Effective Switching Frequency Options

230 Volt, 1 Phase Models				
kW	**HP**	**Default**	**Minimum**	**Maximum**
0.75	1	16 kHz	4 kHz	32 kHz
1.5	2	16 KHz	4 kHz	32 kHz
2.2	3	16 kHz	4 kHz	32 kHz
230 Volt, 3 Phase Models				
kW	**HP**	**Default**	**Minimum**	**Maximum**
0.75	1	16 kHz	4 kHz	32 kHz
1.5	2	16 kHz	4 kHz	32 kHz
2.2	3	16 kHz	4 kHz	32 kHz
3	4	16 kHz	4 kHz	32 kHz
4	5	16 kHz	4 kHz	32 kHz
5.5	7.5	16 kHz	4 kHz	16 kHz
7.5	10	8 kHz	4 kHz	24 kHz
11	15	8 kHz	4 kHz	24 kHz
15	20	8 kHz	4 kHz	24 kHz
18.5	25	8 kHz	4 kHz	24 kHz
22	30	8 kHz	4 kHz	16 kHz
30	40	4 kHz	4 kHz	16 kHz
37	50	4 kHz	4 kHz	12 kHz
45	60	4 kHz	4 kHz	8 kHz
55	75	4 kHz	4 kHz	8 kHz
75	100	4 kHz	4 kHz	8 kHz
400 Volt, 3 Phase Models				
kW	**HP**	**Default**	**Minimum**	**Maximum**
0.75	1	8 kHz	4 kHz	32 kHz
1.5	2	8 kHz	4 kHz	32 kHz
2.2	3	8 kHz	4 kHz	32 kHz
4	5	8 kHz	4 kHz	32 kHz
5.5	7.5	8 kHz	4 kHz	24 kHz
7.5	10	8 kHz	4 kHz	24 kHz
11	15	8 kHz	4 kHz	16 kHz
15	20	8 kHz	4 kHz	24 kHz
18.5	25	8 kHz	4 kHz	24 kHz
22	30	8 kHz	4 kHz	24 kHz
30	40	8 kHz	4 kHz	24 kHz
37	50	8 kHz	4 kHz	24 kHz
45	60	4 kHz	4 kHz	16 kHz
55	75	4 kHz	4 kHz	16 kHz
75	120	4 kHz	4 kHz	12 kHz
90	150	4 kHz	4 kHz	8 kHz
110	175	4 kHz	4 kHz	8 kHz
132	200	4 kHz	4 kHz	8 kHz
160	250	4 kHz	4 kHz	8 kHz
200	300	4 kHz	4 kHz	4 kHz
250	350	4 kHz	4 kHz	4 kHz
600 Volt, 3 Phase Models				
kW	**HP**	**Default**	**Minimum**	**Maximum**
0.75	1	8 kHz	4 kHz	24 kHz
1.5	2	8 kHz	4 kHz	24 kHz
2.2	3	8 kHz	4 kHz	24 kHz
4	5	8 kHz	4 kHz	24 kHz
5.5	7.5	8 kHz	4 kHz	24 kHz
7.5	10	8 kHz	4 kHz	24 kHz
11	15	8 kHz	4 kHz	24 kHz
15	20	8 kHz	4 kHz	16 kHz
18.5	25	8 kHz	4 kHz	24 kHz
22	30	8 kHz	4 kHz	24 kHz
30	40	8 kHz	4 kHz	24 kHz
37	50	8 kHz	4 kHz	24 kHz
45	60	8 kHz	4 kHz	24 kHz
55	75	4 kHz	4 kHz	16 kHz
75	120	4 kHz	4 kHz	16 kHz
90	150	4 kHz	4 kHz	12 kHz
110	175	4 kHz	4 kHz	12 kHz

2.2. V/F Mode Voltage Boost Setting Options

230 Volt, 1 Phase Input Models			
kW	**HP**	**Default**	**Maximum**
0.75	1	2.5%	30.0%
1.5	2	2.5%	30.0%
2.2	3	2.5%	30.0%
230 Volt, 3 Phase Input Models			
kW	**HP**	**Default**	**Maximum**
0.75	1	2.5%	30.0%
1.5	2	2.5%	30.0%
2.2	3	2.5%	30.0%
3	4	2.0%	20.0%
4	5	1.5%	20.0%
5.5	7.5	1.5%	20.0%
7.5	10	1.5%	20.0%
11	15	1.5%	20.0%
15	20	1.0%	20.0%
18.5	25	1.0%	20.0%
22	30	1.0%	15.0%
30	40	1.0%	15.0%
37	50	1.0%	15.0%
45	60	1.0%	15.0%
55	75	0.5%	15.0%
75	100	0.5%	15.0%
90	125	0.5%	15.0%
400 Volt 3 Phase Input Models			
kW	**HP**	**Default**	**Maximum**
0.75	1	2.5%	30.0%
1.5	2	2.5%	30.0%
2.2	3	2.5%	30.0%
4	5	2.5%	30.0%
5.5	7.5	2.0%	20.0%
7.5	10	1.5%	20.0%
11	15	1.5%	20.0%
15	20	1.5%	20.0%
18.5	25	1.5%	20.0%
22	30	1.5%	20.0%
30	40	1.0%	20.0%
37	50	1.0%	20.0%
45	60	1.0%	15.0%
55	75	1.0%	15.0%
75	120	1.0%	15.0%
90	150	1.0%	15.0%
110	175	0.5%	15.0%
132	200	0.5%	15.0%
160	250	0.5%	15.0%
200	300	0.2%	10.0%
250	350	0.2%	10.0%
600 Volt 3 Phase Input Models			
kW	**HP**	**Default**	**Maximum**
0.75	1	2.5%	30.0%
1.5	2	2.5%	30.0%
2.2	3	2.5%	30.0%
4	5	2.5%	30.0%
5.5	7.5	2.5%	20.0%
7.5	10	2.0%	20.0%
11	15	1.5%	20.0%
15	20	1.0%	20.0%
18.5	25	1.5%	20.0%
22	30	1.5%	20.0%
30	40	1.5%	20.0%
37	50	1.0%	20.0%
45	60	1.0%	20.0%
55	75	1.0%	15.0%
75	120	1.0%	15.0%
90	150	1.0%	15.0%
110	175	1.0%	15.0%

3. Embedded Firmware Functions

3.1. 24 Hour Time Clock

Optidrive P2 includes a 24 hour time clock, accessible through the Function Block Editor. This allows time based functions to be realised. The accuracy of the clock varies between drives, and a function is included to allow fine tuning of the timer function. The internal time value may be read from or written to within the function block editor.
Note that the value is not retained during power off.

3.1.1. 24 Hour Timer Trim Adjustment

The internal 24 volt timer includes a trim function, adjusted as follwos :-

- With the drive in display showing “Stop” or “Inhibit”, press and hold the Up and Down keypad keys for >1s
- The display will show the present timer value in hours and minutes as xxhxx, and can be adjusted if desired using the Up and Down keys.
- Following setting of the desired time, press the Navigate button
- The display will now show the timer trim value percentage, displayed as “t0.00”. This can be adjusted using the Up and Down keys to a maximum of + / - 3.00%
- Press the Navigate key to exit the trim adjustment
- Press the Up and Down keys together to exit the timer adjustment, or alternatively, press the Stop key to exit without saving.

If the internal 24 hour timer operates faster than is correct, a positive trim value is required. The trim value can be checked by leaving the drive powered over 24 hours and checking the timer value. The correct trim setting should be Error Minutes / Total Minutes, where Error Minutes is the difference between the drive displayed minutes and the actual minuts that have elapsed.

4. Fieldbus Interface Support

4.1. Fieldbus Interface Options

Optidrive P2 supports a number of Fieldbus Interface Options, either directly on-board the drive (Modbus RTU, CAN Open) or using optional plug in interfaces (e.g. Profibus DP). Where possible, these fieldbus interfaces also provide access to the drive parameters. This chapter details the parameters that can be accessed, and any scaling used when reading or writing (where permissible) to the parameters.

Only one Fieldbus can be supported at a time. When a Fieldbus module is inserted into the drive (e.g. Profibus DP), the on-board fieldbus interfaces such as Modbus RTU and CANbus are disabled. Also, only one internal bus can be supported, hence it is not possible to simultaneously use CANbus and Modbus RTU.

4.2. Fieldbus Support Overview

Optidrive P2 provides support for the following fieldbus networks and functions

Fieldbus	Interface	Drive Control	Drive Parameter Access
Modbus RTU	On-board RJ45	Yes	Access to all Writable Parameters
Modbus TCP	Optional OPT-2-MODIP-IN	Yes	Access to all Writable Parameters
CAN bus	On-board RJ45	Yes	Access to all Writable Parameters
Profibus DP	Optional OPT-2-PROFB-IN	Yes	DPV-1 Access to all Writable Parameters
Profinet IO	Optional OPT-2-PFNET-IN	Yes	Access to all Writable Parameters
DeviceNet	Optional OPT-2-DEVNT-IN	Yes	Access to all Writable Parameters
Ethernet IP	Optional OPT-2-ETHNT-IN	Yes	Access to all Writable Parameters
Ethercat	Optional OPT-2-ETHCT-IN	Yes	-

4.3. Simple Drive Control

For the simplest implementation, all fieldbus systems allow control and monitoring of the drive using a 4 words input, 4 words output cyclic process data exchange. The words are defined as follows :-

Master > Drive					
Reference	**Function**	**Scaling**	**Fieldbus Reference**	**Modbus RTU Register**	**Modbus TCP Register**
Word 1	Drive control Word (Fixed)	N/A	PDI0*	1	1
Word 2	Frequency Setpoint (Fixed)	500 = 50.0Hz		2	2
Word 3	Torque Setpoint (or user selected value in P5-14)	1000 = 100.0%		3	3
Word 4	Fieldbus Ramps (or user selected value in P5-13)	3000 = 30.0 Seconds		4	4
Drive > Master					
Reference	**Function**	**Scaling**	**Fieldbus Reference**	**Modbus RTU Register**	**Modbus TCP Register**
Word 1	Drive Status Word (Fixed)	N/A	PDO0*	6	256
Word 2	Output Frequency (Fixed)	500 = 50.0Hz		7	257
Word 3	Output Current (or user selected value in P5-12)	100 = 10.0A		8	258
Word 4	Output Torque (or user selected value in P5-08)	1000 = 100.0%		9	259

*These references apply to all other fieldbus systems

4.4. Drive Control Word Definition :-

Bit	Function
0	0 : Stop 1 : Run
1	0 : Normal Operation 1 : Fast Stop (P2-25)
2	0 : No Function 1 : Reset Fault
3	0 : Normal Operation 1 : Coast Stop

4.5. Drive Status Word Definition

Bit	Function
0	0 : Drive Stopped 1 : Drive Running
1	0 : Drive Healthy 1 : Drive Tripped
2	No Function
3	0 : Drive Ready 1 : Drive Inhibit
4	0 : Maintenance Time Not Elapsed 1 : Maintenance Time Elapsed
5	0 : Not In Standby 1 : In Standby
6	No Function
7	No Function
8	No Function
9	Fault Code as listed in section 5
10	
11	
12	
13	
14	
15	

4.6. Parameter Access Overview

The accessible parameter numbers and respective scaling are listed in the following tables. The method to access the parameters depends on the fieldbus type in use as described in the following section.
The R/W column indicates whether the values are Writeable as well as readable (R/W) or Read Only (R)
The data types for the parameter are defined as follows :-
WORD Hexadecimal Word
U16 Unsigned 16 Bit Value
S16 Signed 16 Bit Value

4.6.1. Modbus RTU

The table shows the Modbus RTU register number corresponding to each parameter value. All values are holding registers.
All User Adjustable parameters (Groups 1 to 9) are accessible by Modbus, except those that would directly affect the Modbus communications, e.g.

- P5-01 Communication Protocol Select
- P5-02 Drive Fieldbus Address
- P5-03 Modbus RTU Baud Rate
- P5-04 Modbus RTU Data Format

All parameter values can be read from the drive and written to, depending on the operating mode of the drive – some parameters cannot be changed whilst the drive is enabled for example.

Parameter access via Modbus RTU is only possible when no other communication interface is installed in the drive, e.g. it cannot be used simultaneously with a Profibus DP interface present.

When accessing a drive parameter via Modbus RTU, the Register number for the parameter is the same as the parameter number,
E.g. Parameter P1-01 = Modbus Register 101.
Modbus RTU supports sixteen bit integer values; hence parameter values are transferred as integers, ignoring the decimal point.
E.g. Read Value of P1-01 = 500, therefore this is 50.0Hz.
Scaling applied to other parameters is described in the tables.

In addition to the parameter specific register listed, Optidrive P2 also supports indirect Read and Write Access to all addressable parameters using only two Registers.

Register 44 : Parameter Number
When a value is written to Register 44, the present value of that parameter will be transferred to Register 45. Reading Register 45 will allow the user to read the present parameter value.
Register 45 : Parameter Value
This register is used for Read / Write Transfer of parameter data.
Operation : Parameter Read
In order to read the value of a parameter
- WRITE the parameter number to register 44, e.g. for P1-01, write “101” to register 44
- READ the value of Register 45
- The present value in internal format is returned

Operation : Parameter Write
In order to write the value of a parameter
- WRITE the parameter n umber to register 44, e.g. for P1-01, write “101” to register 44
- WRITE the new parameter data setting to register 45 in the correct internal format

READ the value of register 45 to confirm the change

4.6.2. CAN Open
The table shows the Index and Sub Index required to address each parameter. All User Adjustable parameters (Groups 1 to 9) are accessible by CAN, except those that would directly affect the communications.
All parameter values can be read from the drive and written to, depending on the operating mode of the drive – some parameters cannot be changed whilst the drive is enabled for example.
Parameter access via CAN is only possible when no other communication interface is installed in the drive, e.g. it cannot be used simultaneously with a Profibus DP interface present.

4.6.3. Profibus DP
Access to drive parameters uses Profibus DPV-1 read / write services. All User Adjustable Parameters are accessible.
All parameter values can be read from the drive and written to, depending on the operating mode of the drive – some parameters cannot be changed whilst the drive is enabled for example.
The table gives the slot number and index required to access each parameter.

4.6.4. DeviceNet
Access to drive parameters uses vendor specific CIP objects (Class A2h). All User Adjustable Parameters are accessible.
All parameter values can be read from the drive and written to, depending on the operating mode of the drive – some parameters cannot be changed whilst the drive is enabled for example.
The table gives the Instance Attribute, Name and Value (X) for each parameter.

4.6.5. Ethernet IP
Access to drive parameters uses vendor specific CIP objects (Class A2h). All User Adjustable Parameters are accessible.
All parameter values can be read from the drive and written to, depending on the operating mode of the drive – some parameters cannot be changed whilst the drive is enabled for example.
The table gives the Instance Attribute, Name and Value (X) for each parameter.

4.6.6. EtherCat
All parameter values can be read from the drive and written to, depending on the operating mode of the drive – some parameters cannot be changed whilst the drive is enabled for example.
The table gives the Instance Attribute for each parameter.

4.6.7. Modbus TCP
The table shows the Modbus TCP register number corresponding to each parameter value. All values are holding registers.
All parameter values can be read from the drive and written to, depending on the operating mode of the drive – some parameters cannot be changed whilst the drive is enabled for example.

4.6.8. Profinet IO
Access to drive parameters via Profinet uses the Record Data Read / Write service of API0. The table gives the API, Slot, Sub Slot, and Index for each parameter.
All parameter values can be read from the drive and written to, depending on the operating mode of the drive – some parameters cannot be changed whilst the drive is enabled for example.

4.7. Parameter Access Tables

4.7.1. Group 1 : Basic Parameter Set (Level 1)

Parameter Number	R/W	Modbus RTU Register Number	CAN Open Index	CAN Open Sub Index	Profibus DP	DeviceNet	EtherNet IP	EtherCAT	Modbus TCP	Profinet IO	Parameter Name	Setting Range	Scaling	Type
P1-01	R/W	101	2065h	0h	0, 100	A2h, 101, X	A2h, 101, X	2065h	628	0, 0, 1, 0065h	Max Frequency Limit	0 to 30000	3000 = 50.0Hz	U16
P1-02	R/W	102	2066h	0h	0, 101	A2h, 102, X	A2h, 102, X	2066h	629	0, 0, 1, 0066h	Min Frequency Limit	0 to 30000 (Limited by P1-01 Setting)	3000 = 50.0Hz	U16
P1-03	R/W	103	2067h	0h	0, 102	A2h, 103, X	A2h, 103, X	2067h	630	0, 0, 1, 0067h	Acceleration Ramp Time	0 to 6000	300 = 30.0s	U16
P1-04	R/W	104	2068h	0h	0, 103	A2h, 104, X	A2h, 104, X	2068h	631	0, 0, 1, 0068h	Deceleration Ramp Time	0 to 6000	300 = 30.0s	U16
P1-05	R/W	105	2069h	0h	0, 104	A2h, 105, X	A2h, 105, X	2069h	632	0, 0, 1, 0069h	Stop mode	0: Ramp to Stop 1: Coast to Stop 2 = Ramp to Stop, Brake Transistor Enabled 3 = Coast to Stop, Brake Transistor Enabled		U16
P1-06	R/W	106	206Ah	0h	0, 105	A2h, 106, X	A2h, 106, X	206Ah	633	0, 0, 1, 006Ah	Energy optimiser	0: Disable 1: Enable		WORD
P1-07	R/W	107	206Bh	0h	0, 106	A2h, 107, X	A2h, 107, X	206Bh	634	0, 0, 1, 006Bh	Motor rated voltage	0V, 20V to 250V 0V, 20V to 500V 0V, 20V to 600V	230 = 230 V	U16
P1-08	R/W	108	206Ch	0h	0, 107	A2h, 108, X	A2h, 108, X	206Ch	635	0, 0, 1, 006Ch	Motor rated current	20% to 100% of drive rated current	1 = 0.1A	U16
P1-09	R/W	109	206Dh	0h	0, 108	A2h, 109, X	A2h, 109, X	206Dh	636	0, 0, 1, 006Dh	Motor rated frequency	25 to 500Hz	50 = 50Hz	U16
P1-10	R/W	110	206Eh	0h	0, 109	A2h, 110, X	A2h, 110, X	206Eh	637	0, 0, 1, 006Eh	Motor rated speed	0 to 30 000rpm	1500 = 1500rpm	U16
P1-11	R/W	111	206Fh	0h	0, 110	A2h, 111, X	A2h, 111, X	206Fh	638	0, 0, 1, 006Fh	V/F Voltage Boost	Auto, 0.1 to 20%	-1 = Auto 0 = Disabled 1 = 0.1%	S16
P1-12	R/W	112	2070h	0h	0, 111	A2h, 112, X	A2h, 112, X	2070h	639	0, 0, 1, 0070h	Control mode	0: Terminal mode 1: Keypad mode (Unipolar) 2: Keypad mode (Bipolar + direction toggle) 3: User PID mode 4: Fieldbus (Modbus, Profibus etc.) 5: Slave mode		U16
P1-13	R/W	113	2071h	0h	0, 112	A2h, 113, X	A2h, 113, X	2071h	640	0, 0, 1, 0071h	Digital inputs function select	0: User defined 1...20 see table		U16
P1-14	R/W	114	2072h	0h	0, 113	A2h, 114, X	A2h, 114, X	2072h	641	0, 0, 1, 0072h	Extended Menu Access code	0 to 30 000		U16

4.7.2. Group 2 : Extended parameter set (Level 2)

Parameter Number	R/W	Modbus RTU Register Number	CAN Open Index	CAN Open Sub Index	Profibus DP	DeviceNet	EtherNet IP	EtherCAT	Modbus TCP	Profinet IO	Parameter Name	Setting Range	Scaling	Type
P2-01	R/W	201	20C9h	0h	0, 200	A2h, 201, X	A2h, 201, X	20C9h	728	0, 0, 1, 00C9h	Preset speed 1	0 to 30000 (Limited by P1-01 Setting)	3000 = 50.0Hz	U16
P2-02	R/W	202	20CAh	0h	0, 201	A2h, 202, X	A2h, 202, X	20CAh	729	0, 0, 1, 00CAh	Preset speed 2	0 to 30000 (Limited by P1-01 Setting)	3000 = 50.0Hz	U16
P2-03	R/W	203	20CBh	0h	0, 202	A2h, 203, X	A2h, 203, X	20CBh	730	0, 0, 1, 00CBh	Preset speed 3	0 to 30000 (Limited by P1-01 Setting)	3000 = 50.0Hz	U16
P2-04	R/W	204	20CCh	0h	0, 203	A2h, 204, X	A2h, 204, X	20CCh	731	0, 0, 1, 00CCh	Preset speed 4	0 to 30000 (Limited by P1-01 Setting)	3000 = 50.0Hz	U16
P2-05	R/W	205	20CDh	0h	0, 204	A2h, 205, X	A2h, 205, X	20CDh	732	0, 0, 1, 00CDh	Preset speed 5	0 to 30000 (Limited by P1-01 Setting)	3000 = 50.0Hz	U16
P2-06	R/W	206	20CEh	0h	0, 205	A2h, 206, X	A2h, 206, X	20CEh	733	0, 0, 1, 00CEh	Preset speed 6	0 to 30000 (Limited by P1-01 Setting)	3000 = 50.0Hz	U16
P2-07	R/W	207	20CFh	0h	0, 206	A2h, 207, X	A2h, 207, X	20CFh	734	0, 0, 1, 00CFh	Preset speed 7	0 to 30000 (Limited by P1-01 Setting)	3000 = 50.0Hz	U16
P2-08	R/W	208	20D0h	0h	0, 207	A2h, 208, X	A2h, 208, X	20D0h	735	0, 0, 1, 00D0h	Preset speed 8	0 to 30000 (Limited by P1-01 Setting)	3000 = 50.0Hz	U16
P2-09	R/W	209	20D1h	0h	0, 208	A2h, 209, X	A2h, 209, X	20D1h	736	0, 0, 1, 00D1h	Skip frequency centre point	0 to 30000 (Limited by P1-01 Setting)	3000 = 50.0Hz	U16
P2-10	R/W	210	20D2h	0h	0, 209	A2h, 210, X	A2h, 210, X	20D2h	737	0, 0, 1, 00D2h	Skip frequency band	0 to 30000 (Limited by P1-01 Setting)	3000 = 50.0Hz	U16
P2-11	R/W	211	20D3h	0h	0, 210	A2h, 211, X	A2h, 211, X	20D3h	738	0, 0, 1, 00D3h	Analog output 1 function select	**Digital Mode (0V or 24V only)** 0: Drive running 1: Drive healthy 2: Motor at target speed 3: Motor Speed > 0 4: Motor Speed > limit 5: Motor Current > limit 6: Motor Torque > limit 7: 2nd Analog input > limit (Limit set by P2-18, P2-19) **Analog Mode** 8: Speed 9: Current 10: Torque 11: Power		U16
P2-12	R/W	212	20D4h	0h	0, 211	A2h, 212, X	A2h, 212, X	20D4h	739	0, 0, 1, 00D4h	Analog output 1 format	0 = 0…10V 1 = 10…0V 2 = 0-20mA 3 = 20-0mA 4 = 4-20mA 5 = 20-4mA		U16
P2-13	R/W	213	20D5h	0h	0, 212	A2h, 213, X	A2h, 213, X	20D5h	740	0, 0, 1, 00D5h	Analog output 2 function select	**Digital Mode (0V or 24V only)** 0: Drive running 1: Drive healthy 2: Motor at target speed 3: Motor Speed > 0 4: Motor Speed > limit 5: Motor Current > limit 6: Motor Torque > limit 7: 2nd Analog input > limit (Limit set by P2-18, P2-19) **Analog Mode** 8: Speed 9: Current 10: Torque 11: Power		U16
P2-14	R/W	214	20D6h	0h	0, 213	A2h, 214, X	A2h, 214, X	20D6h	741	0, 0, 1, 00D6h	Analog output 2 format	0 = 0…10V 1 = 10…0V 2 = 0-20mA 3 = 20-0mA 4 = 4-20mA 5 = 20-4mA		U16

www.invertekdrives.com

Parameter Number	R/W	Modbus RTU Register Number	CAN Open Index	CAN Open Sub Index	Profibus DP	DeviceNet	EtherNet IP	EtherCAT	Modbus TCP	Profinet IO	Parameter Name	Setting Range	Scaling	Type
P2-15	R/W	215	20D7h	0h	0, 214	A2h, 215, X	A2h, 215, X	20D7h	742	0, 0, 1, 00D7h	User relay 1 output function select	0: Drive running 1: Drive healthy 2: Motor at target speed 3: Motor Speed > 0 4: Motor Speed > limit 5: Motor Current > limit 6: Motor Torque > limit 7: 2nd Analog input > limit		U16
P2-16	R/W	216	20D8h	0h	0, 215	A2h, 216, X	A2h, 216, X	20D8h	743	0, 0, 1, 00D8h	User relay 1 upper limit	P2-17 to 2000	1 = 0.1%	U16
P2-17	R/W	217	20D9h	0h	0, 216	A2h, 217, X	A2h, 217, X	20D9h	744	0, 0, 1, 00D9h	User relay 1 lower limit	0 to P2-16	1 = 0.1%	U16
P2-18	R/W	218	20DAh	0h	0, 217	A2h, 218, X	A2h, 218, X	20DAh	745	0, 0, 1, 00DAh	User relay 2 output function select	0: Drive running 1: Drive healthy 2: Motor at target speed 3: Motor Speed > 0 4: Motor Speed > limit 5: Motor Current > limit 6: Motor Torque > limit 7: 2nd Analog input > limit		U16
P2-19	R/W	219	20DBh	0h	0, 218	A2h, 219, X	A2h, 219, X	20DBh	746	0, 0, 1, 00DBh	User relay 2 upper limit	P2-20 to 2000	1 = 0.1%	U16
P2-20	R/W	220	20DCh	0h	0, 219	A2h, 220, X	A2h, 220, X	20DCh	747	0, 0, 1, 00DCh	User relay 2 lower limit	0 to P2-19	1 = 0.1%	U16
P2-21	R/W	221	20DDh	0h	0, 220	A2h, 221, X	A2h, 221, X	20DDh	748	0, 0, 1, 00DDh	Display scaling factor	0 to 30000	1 = 0.001	U16
P2-22	R/W	222	20DEh	0h	0, 221	A2h, 222, X	A2h, 222, X	20DEh	749	0, 0, 1, 00DEh	Display scaling source	0: Motor Speed 1: Motor Current 2: 2nd Analog input		U16
P2-23	R/W	223	20DFh	0h	0, 222	A2h, 223, X	A2h, 223, X	20DFh	750	0, 0, 1, 00DFh	Zero Speed holding time	0 to 600	1 = 0.1	U16
P2-24	R/W	224	20E0h	0h	0, 223	A2h, 224, X	A2h, 224, X	20E0h	751	0, 0, 1, 00E0h	Effective switching frequency	0 = 4kHz 1 = 8kHz 2 = 12kHz 3 = 16kHz 4 = 24kHz 5 = 32kHz		U16
P2-25	R/W	225	20E1h	0h	0, 224	A2h, 225, X	A2h, 225, X	20E1h	752	0, 0, 1, 00E1h	Fast deceleration ramp time	0 to 3000	S2…S3 1 = 0.01s S4…S7 1 = 0.1s	U16
P2-26	R/W	226	20E2h	0h	0, 225	A2h, 226, X	A2h, 226, X	20E2h	753	0, 0, 1, 00E2h	Spin start enable	0 : Disabled 1 : Enabled	1	WORD
P2-27	R/W	227	20E3h	0h	0, 226	A2h, 227, X	A2h, 227, X	20E3h	754	0, 0, 1, 00E3h	Standby mode	0 to 25000	1 = 0.01	U16
P2-28	R/W	228	20E4h	0h	0, 227	A2h, 228, X	A2h, 228, X	20E4h	755	0, 0, 1, 00E4h	Slave speed scaling control	0: Disabled 1: Preset by slave speed scaling 2: P2-33 scaling + analog in1 offset 3: P2-33 scaling + analog in1 scaling		U16
P2-29	R/W	229	20E5h	0h	0, 228	A2h, 229, X	A2h, 229, X	20E5h	756	0, 0, 1, 00E5h	Slave Speed scaling factor	-5000 to 5000	1 = 0.1	S16
P2-30	R/W	230	20E6h	0h	0, 229	A2h, 230, X	A2h, 230, X	20E6h	757	0, 0, 1, 00E6h	Analog input 1 format	0 = 0-10V 1 = -10-10V 2 = 0-20mA 3 = t 4-20mA 4 = r 4-20mA 5 = t 20-4mA 6 = r 20-4mA		U16
P2-31	R/W	231	20E7h	0h	0, 230	A2h, 231, X	A2h, 231, X	20E7h	758	0, 0, 1, 00E7h	Analog input 1 scaling	0 to 5000	1 = 0.1	U16
P2-32	R/W	232	20E8h	0h	0, 231	A2h, 232, X	A2h, 232, X	20E8h	759	0, 0, 1, 00E8h	Analog input 1 offset	-5000 to 5000	1 = 0.1	S16

Parameter Number	R/W	Modbus RTU Register Number	CAN Open Index	CAN Open Sub Index	Profibus DP	DeviceNet	EtherNet IP	EtherCAT	Modbus TCP	Profinet IO	Parameter Name	Setting Range	Scaling	Type
P2-33	R/W	233	20E9h	0h	0, 232	A2h, 233, X	A2h, 233, X	20E9h	760	0, 0, 1, 00E9h	Analog input 2 format	0 = 0-10V 1 = Ptc-th 2 = 0-20mA 3 = t 4-20mA 4 = r 4-20mA 5 = t 20-4mA 6 = r 20-4mA		U16
P2-34	R/W	234	20EAh	0h	0, 233	A2h, 234, X	A2h, 234, X	20EAh	761	0, 0, 1, 00EAh	Analog input 2 scaling	0 to 5000	1 = 0.1	U16
P2-35	R/W	235	20EBh	0h	0, 234	A2h, 235, X	A2h, 235, X	20EBh	762	0, 0, 1, 00EBh	Analog input 2 offset	-5000 to 5000	1 = 0.1	S16
P2-36	R/W	236	20ECh	0h	0, 235	A2h, 236, X	A2h, 236, X	20ECh	763	0, 0, 1, 00ECh	Start mode select	0 = Edge-r 1 = Auto-0 2 = Auto-1 3 = Auto-2 4 = Auto-3 5 = Auto-4 6 = Auto-5		U16
P2-37	R/W	237	20EDh	0h	0, 236	A2h, 237, X	A2h, 237, X	20EDh	764	0, 0, 1, 00EDh	Keypad restart speed	0: Minimum speed 1: Previous keypad speed 2: Current running Speed 3: Preset Speed 8		U16
P2-38	R/W	238	20EEh	0h	0, 237	A2h, 238, X	A2h, 238, X	20EEh	765	0, 0, 1, 00EEh	Mains loss stop control	0: Mains loss ride through 1: Coast to Stop 2: Fast ramp to stop		U16
P2-39	R/W	239	20EFh	0h	0, 238	A2h, 239, X	A2h, 239, X	20EFh	766	0, 0, 1, 00EFh	Parameter Lock	0: Unlocked 1: Locked		WORD
P2-40	R/W	240	20F0h	0h	0, 239	A2h, 240, X	A2h, 240, X	20F0h	767	0, 0, 1, 00F0h	Extended parameter access code definition	0 ... 9 999		U16

www.invertekdrives.com

4.7.3. Group 3 : User PID control (Level 2)

Parameter Number	R/W	Modbus RTU Register Number	CAN Open Index	CAN Open Sub Index	Profibus DP	DeviceNet	EtherNet IP	EtherCAT	Modbus TCP	Profinet IO	Parameter Name	Setting Range	Scaling	Type
P3-01	R/W	301	212Dh	0h	1, 45	A2h, 301, X	A2h, 301, X	212Dh	828	0, 0, 1, 012Dh	User PID Proportional Gain	1 to 300	1 = 0.1	U16
P3-02	R/W	302	212Eh	0h	1, 46	A2h, 302, X	A2h, 302, X	212Eh	829	0, 0, 1, 012Eh	User PID Integral time constant	0 to 300	1 = 0.1	U16
P3-03	R/W	303	212Fh	0h	1, 47	A2h, 303, X	A2h, 303, X	212Fh	830	0, 0, 1, 012Fh	User PID Differential time constant	0 to 100	1 = 0.01	U16
P3-04	R/W	304	2130h	0h	1, 48	A2h, 304, X	A2h, 304, X	2130h	831	0, 0, 1, 0130h	User PID operating mode	0: Direct 1: Inverse		WORD
P3-05	R/W	305	2131h	0h	1, 49	A2h, 305, X	A2h, 305, X	2131h	832	0, 0, 1, 0131h	User PID reference select	0: Digital preset (P3-06) 1: 1st Analog input 2: 2nd Analog input	1 = 1	U16
P3-06	R/W	306	2132h	0h	1, 50	A2h, 306, X	A2h, 306, X	2132h	833	0, 0, 1, 0132h	User PID digital reference	0 to 1000	1 = 0.1%	U16
P3-07	R/W	307	2133h	0h	1, 51	A2h, 307, X	A2h, 307, X	2133h	834	0, 0, 1, 0133h	User PID controller output high limit	P3-08 to 1000	1 = 0.1%	U16
P3-08	R/W	308	2134h	0h	1, 52	A2h, 308, X	A2h, 308, X	2134h	835	0, 0, 1, 0134h	User PID controller output low limit	0 to P3-07	1 = 0.1%	U16
P3-09	R/W	309	2135h	0h	1, 53	A2h, 309, X	A2h, 309, X	2135h	836	0, 0, 1, 0135h	User PID output control	0: Digital output limits 1: 1st Analog variable upper limit 2: 1st Analog variable lower limit 3: PID output + 1st analog input		U16
P3-10	R/W	310	2136h	0h	1, 54	A2h, 310, X	A2h, 310, X	2136h	837	0, 0, 1, 0136h	User PID feedback select	0: 2nd Analog input 1: 1st Analog input		WORD
P3-11	R/W	311	2137h	0h	1, 55	A2h, 311, X	A2h, 311, X	2137h	838	0, 0, 1, 0137h	PID error to enable ramps	0 to 250	1 = 0.1%	U16
P3-12	R/W	312	2138h	0h	1, 56	A2h, 312, X	A2h, 312, X	2138h	839	0, 0, 1, 0138h	PID feedback value display scaling factor	0 to 50000	0: Disabled 1 = 0.001	U16
P3-13	R/W	313	2139h	0h	1, 57	A2h, 313, X	A2h, 313, X	2139h	840	0, 0, 1, 0139h	PID feedback wake-up level	0 to 1000	1 = 0.1%	U16
P3-18	R/W	318	213Eh	0h	1, 62	A2h, 318, X	A2h, 318, X	213Eh	845	0, 0, 1, 013Eh	PID Operation Control	0 to 1	0 : Continuous Operation 1 : PID operates on Drive Enable	U16

4.7.4. Group 4 : Motor control parameter set (Level 2)

Parameter Number	R/W	Modbus RTU Register Number	CAN Open Index	CAN Open Sub Index	Profibus DP	DeviceNet	EtherNet IP	EtherCAT	Modbus TCP	Profinet IO	Parameter Name	Setting Range	Scaling	Type
P4-01	R/W	401	2191h	0h	1, 145	A2h, 401, X	A2h, 401, X	2191h	928	0, 0, 1, 0191h	Control mode	0 = Speed control (vector) 1 = Torque control (vector) 2 = Speed control (Enhanced V/F) 3 = PM motor speed control (P1-14 = 201) 4 = PM motor torque control (P1-14 = 201) 5 = BLDC motor speed control (P1-14=201)		U16
P4-02	R/W	402	2192h	0h	1, 146	A2h, 402, X	A2h, 402, X	2192h	929	0, 0, 1, 0192h	Motor parameter Auto-tune	0 = Disable 1 = Enable		WORD
P4-03	R/W	403	2193h	0h	1, 147	A2h, 403, X	A2h, 403, X	2193h	930	0, 0, 1, 0193h	Vector Speed controller Proportional Gain	1 to 4000	1 = 0.1%	U16
P4-04	R/W	404	2194h	0h	1, 148	A2h, 404, X	A2h, 404, X	2194h	931	0, 0, 1, 0194h	Vector Speed controller Integral time constant	1 to 1000	1 = 0.001s	U16
P4-05	R/W	405	2195h	0h	1, 149	A2h, 405, X	A2h, 405, X	2195h	932	0, 0, 1, 0195h	Motor power factor	0.00, 50 to 99	99 = 0.99	U16
P4-06	R/W	406	2196h	0h	1, 150	A2h, 406, X	A2h, 406, X	2196h	933	0, 0, 1, 0196h	Torque Control reference	0 = Max Torque limit (P4-07) 1 = 1st analog input 2 = 2nd analog input 3 = Fieldbus / communications 4 = Master drive (Master / Slave) 5 = User PID output		U16
P4-07	R/W	407	2197h	0h	1, 151	A2h, 407, X	A2h, 407, X	2197h	934	0, 0, 1, 0197h	Max motoring torque limit	P4-08 to 2000	2000 = 200.0%	U16
P4-08	R/W	408	2198h	0h	1, 152	A2h, 408, X	A2h, 408, X	2198h	935	0, 0, 1, 0198h	Minimum torque limit	0 to P4-07	1 = 0.1%	U16
P4-09	R/W	409	2199h	0h	1, 153	A2h, 409, X	A2h, 409, X	2199h	936	0, 0, 1, 0199h	Generator mode maximum torque limit	0.0 ... 200%	1 = 1%	U16
P4-10	R/W	410	219Ah	0h	1, 154	A2h, 410, X	A2h, 410, X	219Ah	937	0, 0, 1, 019Ah	V/F characteristic adjustment frequency	0.0…100% of P1-07	1 = 0.1%	U16
P4-11	R/W	411	219Bh	0h	1, 155	A2h, 411, X	A2h, 411, X	219Bh	938	0, 0, 1, 019Bh	V/F characteristic adjustment voltage	0.0…100% of P1-09	1 = 0.1%	U16
P4-12	R/W	412	219Ch	0h	1, 156	A2h, 412, X	A2h, 412, X	219Ch	939	0, 0, 1, 019Ch	Thermal Retention	0 : Disabled 1 : Enabled		U16
P4-13	R/W	412	219Dh	0h	1, 157	A2h, 413, X	A2h, 413, X	219Ch	940	0, 0, 1, 019Ch	Output Phase Sequence	0 : U, V, W 1 : U, W, V		U16

www.invertekdrives.com

4.7.5. Group 5 : Fieldbus communications (Level 2)

Parameter Number	R/W	Modbus RTU Register Number	CAN Open Index	CAN Open Sub Index	Profibus DP	DeviceNet	EtherNet IP	EtherCAT	Modbus TCP	Profinet IO	Parameter Name	Setting Range	Scaling	Type
P5-01	R/W	501	21F5h	0h	1, 245	A2h, 501, X	A2h, 501, X	21F5h	1028	0, 0, 1, 01F5h	Fieldbus drive address	0...63	1 = 1	U16
P5-02	R/W	502	21F6h	0h	1, 246	A2h, 502, X	A2h, 502, X	21F6h	1029	0, 0, 1, 01F6h	CANbus baud rate	125kbps 250kbps 500kbps 1Mbps	0 = 125kbps 1 = 250kbps	U16
P5-03	R/W	503	21F7h	0h	1, 247	A2h, 503, X	A2h, 503, X	21F7h	1030	0, 0, 1, 01F7h	Modbus baud rate	9.6kbps, 19.2kpbs, 38.4kpbs, 57.6kpbs, 115 kbps	0 = 9.6kbps 1 = 19.2kpbs	U16
P5-04	R/W	504	21F8h	0h	1, 248	A2h, 504, X	A2h, 504, X	21F8h	1031	0, 0, 1, 01F8h	Modbus data format	N-1 : None Parity 1 stop bit N-2 : None parity 2 stop bits O-1 : Odd parity 1 stop bit E-1 : Even parity 1 stop bit	0 = N-1 1 = N-2	U16
P5-05	R/W	505	21F9h	0h	1, 249	A2h, 505, X	A2h, 505, X	21F9h	1032	0, 0, 1, 01F9h	Comms loss timeout	0...0.1... 5.0	1 = 0.1s	U16
P5-06	R/W	506	21FAh	0h	1, 250	A2h, 506, X	A2h, 506, X	21FAh	1033	0, 0, 1, 01FAh	Communications loss action	0: Trip 1: Ramp to Stop then trip 2: Ramp to stop (No trip) 3: Preset speed 8	1 = 1	U16
P5-07	R/W	507	21FBh	0h	1, 251	A2h, 507, X	A2h, 507, X	21FBh	1034	0, 0, 1, 01FBh	Fieldbus ramp control	0: Disable 1: Enable	1 = 1	U16
P5-08	R/W	508	21FCh	0h	1, 252	A2h, 508, X	A2h, 508, X	21FCh	1035	0, 0, 1, 01FCh	Anybus module output process data 4	0: Torque (%) 1: Power (x.xx kW) 2: Digital input status 3: 2nd analog input (%) 4. Power stage temperature	1=1	U16
P5-12	R/W	512	21FDh	0h	2, 1	A2h, 512, X	A2h, 512, X	2200h	1039	0, 0, 1, 0200h	Fieldbus PDO3 Select	0 : Output Current 1 : Output Power 2 : Digital Input Status 3 : Analog Input 2 Level 4 : Heatsink Temperature 5 : User Register 1 6 : User Register 2 7 : P0-80 Value		U16
P5-13	R/W	513	21Feh	0h	2, 2	A2h, 513, X	A2h, 513, X	2201h	1040	0, 0, 1, 0201h	Fieldbus PDI 4 Select	0 : Fieldbus Ramp Control 1 : User Register 4		U16
P5-14	R/W	514	21FFh	0h	2, 3	A2h, 514, X	A2h, 514, X	2202h	1041	0, 0, 1, 0202h	Fieldbus PDI 3 Select	0 : Torque Setpoint / Limit 1 : User PID Setpoint 2 : User Register 3		U16
P5-15	R/W	515	2200h	0h	2,4	A2h, 515, X	A2h, 515, X	2203h	1042	0, 0, 1, 0203h	Modbus Response Delay	0 .. 16	1 = 1 Byte	U16

4.7.6. Group 6 : Advanced Parameter set (Level 3)

Parameter Number	R/W	Modbus RTU Register Number	CAN Open Index	CAN Open Sub Index	Profibus DP	DeviceNet	EtherNet IP	EtherCAT	Modbus TCP	Profinet IO	Parameter Name	Setting Range	Scaling	Type
P6-01	R/W	601	2259h	0h	2, 90	A2h, 601, X	A2h, 601, X	2259h	1128	0, 0, 1, 0259h	Firmware Upgrade enable	0: Disabled 1: Enable (IO and DSP) 2: Enable (IO only) 3: Enable (DSP only)		U16
P6-02	R/W	602	225Ah	0h	2, 91	A2h, 602, X	A2h, 602, X	225Ah	1129	0, 0, 1, 025Ah	Auto thermal management	0: Disable 1: Enable		WORD
P6-03	R/W	603	225Bh	0h	2, 92	A2h, 603, X	A2h, 603, X	225Bh	1130	0, 0, 1, 025Bh	Auto-reset delay time	1 to 60		U16
P6-04	R/W	604	225Ch	0h	2, 93	A2h, 604, X	A2h, 604, X	225Ch	1131	0, 0, 1, 025Ch	User relay hysteresis band	0 - 250	1 = 0.1%	U16
P6-05	R/W	605	225Dh	0h	2, 94	A2h, 605, X	A2h, 605, X	225Dh	1132	0, 0, 1, 025Dh	Encoder feedback enable	0: Disabled 1: Enable		WORD
P6-06	R/W	606	225Eh	0h	2, 95	A2h, 606, X	A2h, 606, X	225Eh	1133	0, 0, 1, 025Eh	Encoder PPR	0 to 65535		U16
P6-07	R/W	607	225Fh	0h	2, 96	A2h, 607, X	A2h, 607, X	225Fh	1134	0, 0, 1, 025Fh	Speed error trip level	0 to 500	1 = 0.1%	U16
P6-08	R/W	608	2260h	0h	2, 97	A2h, 608, X	A2h, 608, X	2260h	1135	0, 0, 1, 0260h	Max speed ref frequency	0, 5 to 20		U16
P6-09	R/W	609	2261h	0h	2, 98	A2h, 609, X	A2h, 609, X	2261h	1136	0, 0, 1, 0261h	Speed Droop Control	0 to 250	1 = 0.1%	U16
P6-10	R/W	610	2262h	0h	2, 99	A2h, 610, X	A2h, 610, X	2262h	1137	0, 0, 1, 0262h	Enable Function Block Program operation	0: Disable 1: Enable		WORD
P6-11	R/W	611	2263h	0h	2, 100	A2h, 611, X	A2h, 611, X	2263h	1138	0, 0, 1, 0263h	Speed hold time on enable	0 to 2500	1 = 0.1s	U16
P6-12	R/W	612	2264h	0h	2, 101	A2h, 612, X	A2h, 612, X	2264h	1139	0, 0, 1, 0264h	Speed hold time on disable	0 to 2500	1 = 0.1s	U16
P6-13	R/W	613	2265h	0h	2, 102	A2h, 613, X	A2h, 613, X	2265h	1140	0, 0, 1, 0265h	Hoist mode brake release delay	0 to 50	1 = 0.1s	U16
P6-14	R/W	614	2266h	0h	2, 103	A2h, 614, X	A2h, 614, X	2266h	1141	0, 0, 1, 0266h	Hoist mode brake apply delay	0 to 50	1 = 0.1s	U16
P6-15	R/W	615	2267h	0h	2, 104	A2h, 615, X	A2h, 615, X	2267h	1142	0, 0, 1, 0267h	Torque threshold for hoist brake release	0 to 2000	1 = 0.1%	U16
P6-16	R/W	616	2268h	0h	2, 105	A2h, 616, X	A2h, 616, X	2268h	1143	0, 0, 1, 0268h	Torque threshold timeout	0 to 250	1 = 0.1s	U16
P6-17	R/W	617	2269h	0h	2, 106	A2h, 617, X	A2h, 617, X	2269h	1144	0, 0, 1, 0269h	Max Torque limit timeout	0 to 250	1 = 0.1s	U16
P6-18	R/W	618	226Ah	0h	2, 107	A2h, 618, X	A2h, 618, X	226Ah	1145	0, 0, 1, 026Ah	DC injection braking voltage	0 : Auto 0 to 250	0 = Auto 1= 0.1%	U16
P6-19	R/W	619	226Bh	0h	2, 108	A2h, 619, X	A2h, 619, X	226Bh	1146	0, 0, 1, 026Bh	Brake resistor value	0, Min value to 200	1 = 1	U16
P6-20	R/W	620	226Ch	0h	2, 109	A2h, 620, X	A2h, 620, X	226Ch	1147	0, 0, 1, 026Ch	Brake resistor power	0 to 20000	1= 0.01kw	U16
P6-21	R/W	621	226Dh	0h	2, 110	A2h, 621, X	A2h, 621, X	226Dh	1148	0, 0, 1, 026Dh	Brake chopper UT duty cycle	0 to 200	1 = 0.1%	U16
P6-22	R/W	622	226Eh	0h	2, 111	A2h, 622, X	A2h, 622, X	226Eh	1149	0, 0, 1, 026Eh	Reset cooling fan run-time	0: Disable 1: Enable		WORD
P6-23	R/W	623	226Fh	0h	2, 112	A2h, 623, X	A2h, 623, X	226Fh	1150	0, 0, 1, 026Fh	Reset kWh meter	0: Disable 1: Enable		WORD
P6-24	R/W	624	2270h	0h	2, 113	A2h, 624, X	A2h, 624, X	2270h	1151	0, 0, 1, 0270h	Service time interval	0 … 60 000 h (0 = disabled)	1=1	U16
P6-25	R/W	625	2271h	0h	2, 114	A2h, 625, X	A2h, 625, X	2271h	1152	0, 0, 1, 0271h	Reset service indicator	0: Disable 1: Reset	1=1	WORD
P6-26	R/W	626	2272h	0h	2, 115	A2h, 626, X	A2h, 626, X	2272h	1153	0, 0, 1, 0272h	Analog output 1 scaling	0 to 5000	1 = 0.1	U16
P6-27	R/W	627	2273h	0h	2, 116	A2h, 627, X	A2h, 627, X	2273h	1154	0, 0, 1, 0273h	Analog output 1 offset	-5000 to 5000	1 = 0.1%	S16
P6-28	R/W	628	2274h	0h	2, 117	A2h, 628, X	A2h, 628, X	2274h	1155	0, 0, 1, 0274h	P0-80 display value index	0 to 127		U16
P6-29	R/W	629	2275h	0h	2, 118	A2h, 629, X	A2h, 629, X	2275h	1156	0, 0, 1, 0275h	Save User Parameters as default	0: Disable 1: Enable		WORD
P6-30	R/W	630	2276h	0h	2, 119	A2h, 630, X	A2h, 630, X	2276h	1157	0, 0, 1, 0276h	Level 3 access code	0 to 9999		U16

www.invertekdrives.com

4.7.7. Group 7 : Motor Control Parameter set (Level 3)

Parameter Number	R/W	Modbus RTU Register Number	CAN Open Index	CAN Open Sub Index	Profibus DP	DeviceNet	EtherNet IP	EtherCAT	Modbus TCP	Profinet IO	Parameter Name	Setting Range	Scaling	Type
P7-01	R/W	701	22BDh	0h	2, 190	A2h, 701, X	A2h, 701, X	22BDh	1228	0, 0, 1, 02BDh	Motor Stator resistance	Drive dependent	1 = 0.001ohm	U16
P7-02	R/W	702	22BEh	0h	2, 191	A2h, 702, X	A2h, 702, X	22BEh	1229	0, 0, 1, 02BEh	Motor Rotor resistance	Drive dependent	1 = 0.001ohm	U16
P7-03	R/W	703	22BFh	0h	2, 192	A2h, 703, X	A2h, 703, X	22BFh	1230	0, 0, 1, 02BFh	Motor stator inductance	Drive dependent	1 = 0.0001H	U16
P7-04	R/W	704	22C0h	0h	2, 193	A2h, 704, X	A2h, 704, X	22C0h	1231	0, 0, 1, 02C0h	Motor Magnetising Current	Drive dependent	1 = 0.1A	U16
P7-05	R/W	705	22C1h	0h	2, 194	A2h, 705, X	A2h, 705, X	22C1h	1232	0, 0, 1, 02C1h	Motor Leakage Coefficient	0 to 250	1 = 0.001	U16
P7-06	R/W	706	22C2h	0h	2, 195	A2h, 706, X	A2h, 706, X	22C2h	1233	0, 0, 1, 02C2h	Motor Stator inductance (PM only)	Drive dependent	1 = 0.0001H	U16
P7-07	R/W	707	22C3h	0h	2, 196	A2h, 707, X	A2h, 707, X	22C3h	1234	0, 0, 1, 02C3h	Enhanced generator control	0: Disable 1: Enable		WORD
P7-08	R/W	708	22C4h	0h	2, 197	A2h, 708, X	A2h, 708, X	22C4h	1235	0, 0, 1, 02C4h	Parameter adaptation	0: Disable 1: Enable		WORD
P7-09	R/W	709	22C5h	0h	2, 198	A2h, 709, X	A2h, 709, X	22C5h	1236	0, 0, 1, 02C5h	Over voltage current limit	0.0 to 100% of motor rated current	1 =0.1%	U16
P7-10	R/W	710	22C6h	0h	2, 199	A2h, 710, X	A2h, 710, X	22C6h	1237	0, 0, 1, 02C6h	Load Inertia Factor	0 to 600	1=1	U16
P7-11	R/W	711	22C7h	0h	2, 200	A2h, 711, X	A2h, 711, X	22C7h	1238	0, 0, 1, 02C7h	Pulse width minimum limit	0 to 500 (Time = value *16.67ns)	1 =1	U16
P7-12	R/W	712	22C8h	0h	2, 201	A2h, 712, X	A2h, 712, X	22C8h	1239	0, 0, 1, 02C8h	V/F mode magnetising period	0 to 2000		U16
P7-13	R/W	713	22C9h	0h	2, 202	A2h, 713, X	A2h, 713, X	22C9h	1240	0, 0, 1, 02C9h	Vector Speed Controller D-Gain	0 to 4000	1 = 0.1%	U16
P7-14	R/W	714	22CAh	0h	2, 203	A2h, 714, X	A2h, 714, X	22CAh	1241	0, 0, 1, 02CAh	Low frequency torque boost	0 to 1000	1 =0.1%	U16
P7-15	R/W	715	22CBh	0h	2, 204	A2h, 715, X	A2h, 715, X	22CBh	1242	0, 0, 1, 02CBh	Torque boost frequency limit	0 to 500	1 =0.1%	U16
P7-16	R/W	716	22CCh	0h	2, 205	A2h, 716, X	A2h, 716, X	22CCh	1243	0, 0, 1, 02CCh	PM Motor Signal Injection	0 : Disabled 1 : Enabled		U16
P7-17	R/W	717	22CDh	0h	2, 206	A2h, 717, X	A2h, 717, X	22CDh	1244	0, 0, 1, 02CDh	Signal Injection Level	0 - 100		U16
P7-18	R/W	718	22CEh	0h	2, 207	A2h, 718, X	A2h, 718, X	22CEh	1245	0, 0, 1, 02CEh	Over Modulation	0 : Disabled 1 : Enabled		U16

4.7.8. Group 8 : Application Specific Parameters - Level 3

Parameter Number	R/W	Modbus RTU Register Number	CAN Open Index	CAN Open Sub Index	Profibus DP	DeviceNet	EtherNet IP	EtherCAT	Modbus TCP	Profinet IO	Parameter Name	Setting Range	Scaling	Type
P8-01	R/W	801	2321h	0h	3, 35	A2h, 801, X	A2h, 801, X	2321h	1328	0, 0, 1, 0321h	Accel Ramp 2	0 to 60000	S2…S3 1 = 0.01s S4…S7 1 = 0.1s	U16
P8-02	R/W	802	2322h	0h	3, 36	A2h, 802, X	A2h, 802, X	2322h	1329	0, 0, 1, 0322h	Speed boundary – Accel ramp 1 → 2	0 to 30000 (Limited by P1-01 Setting)	3000 = 50.0Hz	U16
P8-03	R/W	803	2323h	0h	3, 37	A2h, 803, X	A2h, 803, X	2323h	1330	0, 0, 1, 0323h	Accel Ramp 3	0 to 60000	S2…S3 1 = 0.01s S4…S7 1 = 0.1s	U16
P8-04	R/W	804	2324h	0h	3, 38	A2h, 804, X	A2h, 804, X	2324h	1331	0, 0, 1, 0324h	Speed boundary – Accel ramp 2 → 3	0 to 30000 (Limited by P1-01 Setting)	3000 = 50.0Hz	U16
P8-05	R/W	805	2325h	0h	3, 39	A2h, 805, X	A2h, 805, X	2325h	1332	0, 0, 1, 0325h	Accel Ramp 4	0 to 60000	S2…S3 1 = 0.01s S4…S7 1 = 0.1s	U16
P8-06	R/W	806	2326h	0h	3, 40	A2h, 806, X	A2h, 806, X	2326h	1333	0, 0, 1, 0326h	Speed boundary – Accel ramp 3 → 4	0 to 30000 (Limited by P1-01 Setting)	3000 = 50.0Hz	U16
P8-07	R/W	807	2327h	0h	3, 41	A2h, 807, X	A2h, 807, X	2327h	1334	0, 0, 1, 0327h	Decel Ramp 4	0 to 60000	S2…S3 1 = 0.01s S4…S7 1 = 0.1s	U16
P8-08	R/W	808	2328h	0h	3, 42	A2h, 808, X	A2h, 808, X	2328h	1335	0, 0, 1, 0328h	Speed boundary – Accel ramp 4 → 3	0 to 30000 (Limited by P1-01 Setting)	3000 = 50.0Hz	U16
P8-09	R/W	809	2329h	0h	3, 43	A2h, 809, X	A2h, 809, X	2329h	1336	0, 0, 1, 0329h	Decel Ramp 3	0 to 60000	S2…S3 1 = 0.01s S4…S7 1 = 0.1s	U16
P8-10	R/W	810	232Ah	0h	3, 44	A2h, 810, X	A2h, 810, X	232Ah	1337	0, 0, 1, 032Ah	Speed boundary – Accel ramp 3 → 2	0 to 30000 (Limited by P1-01 Setting)	3000 = 50.0Hz	U16
P8-11	R/W	811	232Bh	0h	3, 45	A2h, 811, X	A2h, 811, X	232Bh	1338	0, 0, 1, 032Bh	Decel Ramp 2	0 to 60000	S2…S3 1 = 0.01s S4…S7 1 = 0.1s	U16
P8-12	R/W	812	232Ch	0h	3, 46	A2h, 812, X	A2h, 812, X	232Ch	1339	0, 0, 1, 032Ch	Speed boundary – Accel ramp 2 → 1	0 to 30000 (Limited by P1-01 Setting)	3000 = 50.0Hz	U16
P8-13	R/W	813	232Dh	0h	3, 47	A2h, 813, X	A2h, 813, X	232Dh	1340	0, 0, 1, 032Dh	Ramp select by Preset Speed	0: Disabled 1: Enable		WORD

4.7.9. Parameter Group 9 ADI's

Parameter Number	R/W	Modbus RTU Register Number	CAN Open Index	CAN Open Sub Index	Profibus DP	DeviceNet	EtherNet IP	EtherCAT	Modbus TCP	Profinet IO		Scaling	Type
P9-01	R/W	901	2385h	0h	3, 135	A2h, 901, X	A2h, 901, X	2385h	1428	0, 0, 1, 0385h	Enable Source	0 : Safety Input 1 : Digital Input 1 2 : Digital Input 2 3 : Digital Input 3 4 : Digital Input 4 5 : Digital Input 5 6 : Digital Input 6 7 : Digital Input 7 8 : Digital Input 8	U16
P9-02	R/W	902	2386h	0h	3, 136	A2h, 902, X	A2h, 902, X	2386h	1429	0, 0, 1, 0386h	Fast Stop Source	0 : Safety Input 1 : Digital Input 1 2 : Digital Input 2 3 : Digital Input 3 4 : Digital Input 4 5 : Digital Input 5 6 : Digital Input 6 7 : Digital Input 7 8 : Digital Input 8 9 : Analog Output 1 10 : Analog Output 2 11 : Digital Output 1 12 : Digital Output 2 13 : Digital Output 3 14 Digital Output 4 15 : Digital Output 5 16 : ON 17 : User Register 1 18 : User Register 2 19 : User Register 3 20 : User Register 4 21 : User Register 5 22 : User Register 6 23 : User Register 7 24 : User Register 8 25 : User Register 9	U16
P9-03	R/W	903	2387h	0h	3, 137	A2h, 903, X	A2h, 903, X	2387h	1430	0, 0, 1, 0387h	Run Forward Source		U16
P9-04	R/W	904	2388h	0h	3, 138	A2h, 904, X	A2h, 904, X	2388h	1431	0, 0, 1, 0388h	Run Reverse Source		U16
P9-05	R/W	905	2389h	0h	3, 139	A2h, 905, X	A2h, 905, X	2389h	1432	0, 0, 1, 0389h	Latch Enable	0 : Disabled 1 : Enabled	U16
P9-06	R/W	906	238Ah	0h	3, 140	A2h, 906, X	A2h, 906, X	238Ah	1433	0, 0, 1, 038Ah	Reverse Source	0 : Safety Input 1 : Digital Input 1 2 : Digital Input 2	U16
P9-07	R/W	907	238Bh	0h	3, 141	A2h, 907, X	A2h, 907, X	238Bh	1434	0, 0, 1, 038Bh	Reset Source		U16
P9-08	R/W	908	238Ch	0h	3, 142	A2h, 908, X	A2h, 908, X	238Ch	1435	0, 0, 1, 038Ch	External Trip Source		U16

Parameter Number	R/W	Modbus RTU Register Number	CAN Open Index	CAN Open Sub Index	Profibus DP	DeviceNet	EtherNet IP	EtherCAT	Modbus TCP	Profinet IO		Scaling	Type
P9-09	R/W	909	238Dh	0h	3, 143	A2h, 909, X	A2h, 909, X	238Dh	1436	0, 0, 1, 038Dh	Terminal Control Override Source	3 : Digital Input 3 4 : Digital Input 4 5 : Digital Input 5 6 : Digital Input 6 7 : Digital Input 7 8 : Digital Input 8 9 : Analog Output 1 10 : Analog Output 2 11 : Digital Output 1 12 : Digital Output 2 13 : Digital Output 3 14 Digital Output 4 15 : Digital Output 5 16 : ON 17 : User Register 1 18 : User Register 2 19 : User Register 3 20 : User Register 4 21 : User Register 5 22 : User Register 6 23 : User Register 7 24 : User Register 8 25 : User Register 9	U16
P9-10	R/W	910	238Eh	0h	3, 144	A2h, 910, X	A2h, 910, X	238Eh	1437	0, 0, 1, 038Eh	Speed Source 1	0 : Analog Input 1 1 : Analog Input 2 2 : Preset Speed 3 : Keypad Speed 4 : User PID Speed 5 : Master Speed 6 : Fieldbus Speed 7 : User Speed 8 : Frequency Input 9 : Preset Speed 1 10 : Preset Speed 2 11 : Preset Speed 3 12 : Preset Speed 4 13 : Preset Speed 5 14 : Preset Speed 6 15 : Preset Speed 7 16 : Preset Speed 8	U16
P9-11	R/W	911	238Fh	0h	3, 145	A2h, 911, X	A2h, 911, X	238Fh	1438	0, 0, 1, 038Fh	Speed Source 2		U16
P9-12	R/W	912	2390h	0h	3, 146	A2h, 912, X	A2h, 912, X	2390h	1439	0, 0, 1, 0390h	Speed Source 3		U16
P9-13	R/W	913	2391h	0h	3, 147	A2h, 913, X	A2h, 913, X	2391h	1440	0, 0, 1, 0391h	Speed Source 4		U16
P9-14	R/W	914	2392h	0h	3, 148	A2h, 914, X	A2h, 914, X	2392h	1441	0, 0, 1, 0392h	Speed Source 5		U16
P9-15	R/W	915	2393h	0h	3, 149	A2h, 915, X	A2h, 915, X	2393h	1442	0, 0, 1, 0393h	Speed Source 6		U16
P9-16	R/W	916	2394h	0h	3, 150	A2h, 916, X	A2h, 916, X	2394h	1443	0, 0, 1, 0394h	Speed Source 7		U16
P9-17	R/W	917	2395h	0h	3, 151	A2h, 917, X	A2h, 917, X	2395h	1444	0, 0, 1, 0395h	Speed Source 8		U16
P9-18	R/W	918	2396h	0h	3, 152	A2h, 918, X	A2h, 918, X	2396h	1445	0, 0, 1, 0396h	Speed Source Select Input Bit 0	0 : Safety Input 1 : Digital Input 1 2 : Digital Input 2 3 : Digital Input 3 4 : Digital Input 4 5 : Digital Input 5 6 : Digital Input 6 7 : Digital Input 7 8 : Digital Input 8 9 : Analog Output 1 10 : Analog Output 2 11 : Digital Output 1 12 : Digital Output 2 13 : Digital Output 3 14 Digital Output 4 15 : Digital Output 5	U16
P9-19	R/W	919	2397h	0h	3, 153	A2h, 919, X	A2h, 919, X	2397h	1446	0, 0, 1, 0397h	Speed Source Select Input Bit 1		U16
P9-20	R/W	920	2398h	0h	3, 154	A2h, 920, X	A2h, 920, X	2398h	1447	0, 0, 1, 0398h	Speed Source Select Input Bit 2		U16
P9-21	R/W	921	2399h	0h	3, 155	A2h, 921, X	A2h, 921, X	2399h	1448	0, 0, 1, 0399h	Preset Speed Select Bit 0		U16
P9-22	R/W	922	239Ah	0h	3, 156	A2h, 922, X	A2h, 922, X	239Ah	1449	0, 0, 1, 039Ah	Preset Speed Select Bit 1		U16
P9-23	R/W	923	239Bh	0h	3, 157	A2h, 923, X	A2h, 923, X	239Bh	1450	0, 0, 1, 039Bh	Preset Speed Select Bit 2		U16
P9-24	R/W	924	239Ch	0h	3, 158	A2h, 924, X	A2h, 924, X	239Ch	1451	0, 0, 1, 039Ch	Acceleration Ramp Select Bit 0		U16
P9-25	R/W	925	239Dh	0h	3, 159	A2h, 925, X	A2h, 925, X	239Dh	1452	0, 0, 1, 039Dh	Acceleration Ramp Select Bit 1		U16

Parameter Number	R/W	Modbus RTU Register Number	CAN Open Index	CAN Open Sub Index	Profibus DP	DeviceNet	EtherNet IP	EtherCAT	Modbus TCP	Profinet IO		Scaling	Type
P9-26	R/W	926	239Eh	0h	3, 160	A2h, 926, X	A2h, 926, X	239Eh	1453	0, 0, 1, 039Eh	Deceleration Ramp Select Bit 0	16 : ON 17 : User Register 1 18 : User Register 2 19 : User Register 3 20 : User Register 4 21 : User Register 5 22 : User Register 6 23 : User Register 7 24 : User Register 8 25 : User Register 9	U16
P9-27	R/W	927	239Fh	0h	3, 161	A2h, 927, X	A2h, 927, X	239Fh	1454	0, 0, 1, 039Fh	Deceleration Ramp Select Bit 1		U16
P9-28	R/W	928	23A0h	0h	3, 162	A2h, 928, X	A2h, 928, X	23A0h	1455	0, 0, 1, 03A0h	Remote Up Button Source		U16
P9-29	R/W	929	23A1h	0h	3, 163	A2h, 929, X	A2h, 929, X	23A1h	1456	0, 0, 1, 03A1h	Remote Down Button Source		U16
P9-30	R/W	930	23A2h	0h	3, 164	A2h, 930, X	A2h, 930, X	23A2h	1457	0, 0, 1, 03A2h	Speed Limit FWD Source		U16
P9-31	R/W	931	23A3h	0h	3, 165	A2h, 931, X	A2h, 931, X	23A3h	1458	0, 0, 1, 03A3h	Speed Limit Reverse Source		U16
P9-33	R/W	933	23A5h	0h	3, 167	A2h, 933, X	A2h, 933, X	23A5h	1460	0, 0, 1, 03A5h	Analog Output 1 Control	0 : P2-11 1: User Defined Digital 2 : User Defined Analog	U16
P9-34	R/W	934	23A6h	0h	3, 168	A2h, 934, X	A2h, 934, X	23A6h	1461	0, 0, 1, 03A6h	Analog Output 2 Control	0 : P2-13 1: User Defined Digital 2 : User Defined Analog	U16
P9-35	R/W	935	23A7h	0h	3, 169	A2h, 935, X	A2h, 935, X	23A7h	1462	0, 0, 1, 03A7h	Relay 1 Control	0 : P2-15 1: User Defined Digital	U16
P9-36	R/W	936	23A8h	0h	3, 170	A2h, 936, X	A2h, 936, X	23A8h	1463	0, 0, 1, 03A8h	Relay 2 Control	0 : P2-18 1: User Defined Digital	U16
P9-37	R/W	937	23A9h	0h	3, 171	A2h, 937, X	A2h, 937, X	23A9h	1464	0, 0, 1, 03A9h	Scaling Source Control	0 : P2-22 1: User Defined	U16
P9-38	R/W	938	23AAh	0h	3, 172	A2h, 938, X	A2h, 938, X	23AAh	1465	0, 0, 1, 03AAh	PID Setpoint Source Control	0 : P3-05 1: User Defined	U16
P9-39	R/W	939	23ABh	0h	3, 173	A2h, 939, X	A2h, 939, X	23ABh	1466	0, 0, 1, 03ABh	PID Feedback Source Control	0 : P3-10 1: User Defined	U16
P9-40	R/W	940	23ACh	0h	3, 174	A2h, 940, X	A2h, 940, X	23ACh	1467	0, 0, 1, 03ACh	Torque Reference Source Control	0 : P4-06 1: User Defined	U16
P9-41	R/W	941	23ADh	0h	3, 175	A2h, 941, X	A2h, 941, X	23ADh	1468	0, 0, 1, 03ADh	Relay 3 – 5 Control	0 : Predefined 1 : User Defined	U16

4.7.10. Read Only Parameters & Group 0.

Note : Not All Group 0 parameters are accessible by Fieldbus

Parameter Number	Parameter Name	R/W	Modbus RTU Register Number	CAN Open Index	CAN Open Sub Index	Profibus DP	DeviceNet	EtherNet IP	EtherCAT	Modbus TCP	Profinet IO	Scaling	Type
P0-01	Analog Input 1 Signal Level (%)	R	20	2013h	0h	4, 41	A2h, 1062, X	A2h, 1062, X	2426h	1589	0, 0, 1, 0426h	1000 = 100.0%	S16
	Analog Input 1 Signal Level (Q12)	R				4, 40	A2h, 1061, X	A2h, 1061, X	2425h	1588	0, 0, 1, 0425h	4096 = 100.0%	U16
P0-02	Analog Input 2 Signal Level (%)	R	21	2014h	0h	4, 43	A2h, 1064, X	A2h, 1064, X	2428h	1591	0, 0, 1, 0428h	1000 = 100.0%	S16
	Analog Input 2 Signal Level (Q12)	R				4, 42	A2h, 1063, X	A2h, 1063, X	2427h	1590	0, 0, 1, 0427h		
P0-03	Digital Input Status	R	11	2012h	0h	4, 44	A2h, 1065, X	A2h, 1065, X	2429h	1592	0, 0, 1, 0429h	Bit 0 = Digital Input 1 Bit 1 = Digital Input 2 Etc...	WORD
	Digital Input 1	R				3, 235	A2h, 1001, X	A2h, 1001, X	23E9h	1528	0, 0, 1, 03E9h		WORD
	Digital Input 2	R				3, 236	A2h, 1002, X	A2h, 1002, X	23EAh	1529	0, 0, 1, 03EAh		WORD
	Digital Input 3	R				3, 237	A2h, 1003, X	A2h, 1003, X	23EBh	1530	0, 0, 1, 03EBh		WORD
	Digital Input 4	R				3, 238	A2h, 1004, X	A2h, 1004, X	23ECh	1531	0, 0, 1, 03ECh		WORD
	Digital Input 5	R				3, 239	A2h, 1005, X	A2h, 1005, X	23EDh	1532	0, 0, 1, 03EDh		WORD
	Digital Input 6	R				3, 240	A2h, 1006, X	A2h, 1006, X	23EEh	1533	0, 0, 1, 03EEh		WORD
	Digital Input 7	R				3, 241	A2h, 1007, X	A2h, 1007, X	23EFh	1534	0, 0, 1, 03EFh		WORD
	Digital Input 8	R				3, 242	A2h, 1008, X	A2h, 1008, X	23F0h	1535	0, 0, 1, 03F0h		WORD
P0-04	Pre Ramp Speed Reference (Hz)	R	22	2044h	0h	4, 45	A2h, 1066, X	A2h, 1066, X	242Ah	1593	0, 0, 1, 042Ah		
P0-05	Torque reference value	R	41	2045h	0h	4, 52	A2h, 1073, X	A2h, 1073, X	2431h	1600	0, 0, 1, 0431h	1000 = 100.0%	U16
	Torque Reference (Q12)	R				4, 51	A2h, 1072, X	A2h, 1072, X	2430h	1599	0, 0, 1, 0430h	4096 = 100.0%	U16
P0-06	Digital pot reference value	R	42	2046h	0h	4, 46	A2h, 1067, X	A2h, 1067, X	242Bh	1594	0, 0, 1, 042Bh		
P0-07	Fieldbus Speed Reference	R				4, 47	A2h, 1068, X	A2h, 1068, X	242Ch	1595	0, 0, 1, 042Ch		
P0-08	PID Setpoint	R				4, 57	A2h, 1078, X	A2h, 1078, X	2436h	1605	0, 0, 1, 0436h	4096 = 100.0%	U16
P0-09	PID Feedback	R				4, 58	A2h, 1079, X	A2h, 1079, X	2437h	1606	0, 0, 1, 0437h	4096 = 100.0%	U16
P0-10	PID Output	R				4, 59	A2h, 1080, X	A2h, 1080, X	2438h	1607	0, 0, 1, 0438h	4096 = 100.0%	U16
P0-11	Applied Motor Voltage	R											
P0-12	Motor Torque	R	9	200Eh	0h	4, 70	A2h, 1091, X	A2h, 1091, X	2443h	1618	0, 0, 1, 0443h	1000 = 100.0%	1000 = 100.0%
P0-20	DC bus Voltage	R	23	2011h	0h	4, 65	A2h, 1086, X	A2h, 1086, X	243Eh	1613	0, 0, 1, 043Eh	600 = 600 Volts	600 = 600 Volts
P0-21	Drive Temperature	R	24	2010h	0h	4, 66	A2h, 1087, X	A2h, 1087, X	243Fh	1614	0, 0, 1, 043Fh	40 = 40°C	40 = 40°C
P0-26	kWh meter (User)	R	30	203Ah	0h	4, 109	A2h, 1130, X	A2h, 1130, X	246Ah	1657	0, 0, 1, 046Ah	100 = 10.0kWh	100 = 10.0kWh
P0-26	kWh Meter	R	32	203Ch	0h	4, 110	A2h, 1131, X	A2h, 1131, X	246Bh	1658	0, 0, 1, 046Bh		
P0-27	MWh meter (User)	R	31	203Bh	0h	4, 111	A2h, 1132, X	A2h, 1132, X	246Ch	1659	0, 0, 1, 046Ch	100 = 100MWh	100 = 100MWh
P0-27	MWh Meter	R	33	203Dh	0h	4, 112	A2h, 1133, X	A2h, 1133, X	246Dh	1660	0, 0, 1, 046Dh		
P0-28	IO Processor Software Version	R	15			0, 10	A2h, 11, X	A2h, 11, X	200Bh	538	0, 0, 1, 000Bh	100 = 1.00	100 = 1.00
	IO Checksum	R				0, 11	A2h, 12, X	A2h, 12, X	200Ch	539	0, 0, 1, 000Ch		
	Motor Control Processor Software Version	R	16			0, 12	A2h, 13, X	A2h, 13, X	200Dh	540	0, 0, 1, 000Dh	100 = 1.00	100 = 1.00
	MC Checksum	R				0, 13	A2h, 14, X	A2h, 14, X	200Eh	541	0, 0, 1, 000Eh		
P0-29	Rating ID	R	12			0, 8	A2h, 9, X	A2h, 9, X	2009h	536	0, 0, 1, 0009h		
	Power rating	R	13										
	Voltage rating	R	14										
	Drive Type	R	17			0, 9	A2h, 10, X	A2h, 10, X	200Ah	537	0, 0, 1, 000Ah		
P0-30	Drive Serial Number 1	R	25			0, 14	A2h, 15, X	A2h, 15, X	200Fh	542	0, 0, 1, 000Fh		
	Drive Serial Number 2	R	26			0, 15	A2h, 16, X	A2h, 16, X	2010h	543	0, 0, 1, 0010h		
	Drive Serial Number 3	R	27			0, 16	A2h, 17, X	A2h, 17, X	2011h	544	0, 0, 1, 0011h		
	Drive Serial Number 4	R	28			0, 17	A2h, 18, X	A2h, 18, X	2012h	545	0, 0, 1, 0012h		
P0-31	Running time – hour	R	34	203Eh	0h	4, 113	A2h, 1134, X	A2h, 1134, X	246Eh	1661	0, 0, 1, 046Eh		
P0-31	Running time – min/sec	R	35	203Fh	0h	4, 114	A2h, 1135, X	A2h, 1135, X	246Fh	1662	0, 0, 1, 046Fh		
P0-34	Running time since last enable – hour	R	36	2040h	0h	4, 115	A2h, 1136, X	A2h, 1136, X	2470h	1663	0, 0, 1, 0470h		
	Running time since last enable – min/sec	R	37	2040h	0h	4, 116	A2h, 1137, X	A2h, 1137, X	2471h	1664	0, 0, 1, 0471h		
P0-70	Plug-In Module ID	R				4, 75	A2h, 1096, X	A2h, 1096, X	2448h	1623	0, 0, 1, 0448h		

Parameter Number	Parameter Name	R/W	Modbus RTU Register Number	CAN Open Index	CAN Open Sub Index	Profibus DP	DeviceNet	EtherNet IP	EtherCAT	Modbus TCP	Profinet IO	Scaling	Type
P0-71	Anybus Module ID	R				4, 76	A2h, 1097, X	A2h, 1097, X	2449h	1624	0, 0, 1, 0449h		
P0-72	Room (Control PCB) temperature	R	39			4, 67	A2h, 1088, X	A2h, 1088, X	2440h	1615	0, 0, 1, 0440h		
P0-73	24 Hour Timer	R				4, 27	A2h, 1048, X	A2h, 1048, X	2418h	1575	0, 0, 1, 0418h		
P0-80	P0-80	R	43										

4.7.11. Additional Values

Parameter Name	R/W	Modbus RTU Register Number	CAN Open Index	CAN Open Sub Index	Profibus DP	DeviceNet	EtherNet IP	EtherCAT	Modbus TCP	Profinet IO	Scaling	Type	Notes
Analog Output 1 Signal Level	R		2015h	0h	3, 243	A2h, 1009, X	A2h, 1009, X	23F1h	1536	0, 0, 1, 03F1h			
Analog Output 2 Signal Level	R		2016h	0h	3, 244	A2h, 1010, X	A2h, 1010, X	23F2h	1537	0, 0, 1, 03F2h			
User Relay Output 1 Status	R		2017h	0h	3, 245	A2h, 1011, X	A2h, 1011, X	23F3h	1538	0, 0, 1, 03F3h			
User Relay Output 2 Status	R		2018h	0h	3, 246	A2h, 1012, X	A2h, 1012, X	23F4h	1539	0, 0, 1, 03F4h			
User Relay Output 3 Status	R		2019h	0h	3, 247	A2h, 1013, X	A2h, 1013, X	23F5h	1540	0, 0, 1, 03F5h			
User Relay Output 4 Status	R		201Ah	0h	3, 248	A2h, 1014, X	A2h, 1014, X	23F6h	1541	0, 0, 1, 03F6h			
User Relay Output 5 Status	R		201Bh	0h	3, 249	A2h, 1015, X	A2h, 1015, X	23F7h	1542	0, 0, 1, 03F7h			
Fieldbus/User Ramp Value	R				4, 24	A2h, 1045, X	A2h, 1045, X	2415h	1572	0, 0, 1, 0415h			
Scope Index 1/2	R				4, 25	A2h, 1046, X	A2h, 1046, X	2416h	1573	0, 0, 1, 0416h			
Scope Index 3/4	R				4, 26	A2h, 1047, X	A2h, 1047, X	2417h	1574	0, 0, 1, 0417h			
24hour timer Value	R												
Master Speed Reference	R				4, 48	A2h, 1069, X	A2h, 1069, X	242Dh	1596	0, 0, 1, 042Dh			
Slave Speed Reference	R				4, 49	A2h, 1070, X	A2h, 1070, X	242Eh	1597	0, 0, 1, 042Eh			
Frequency Input Speed Ref	R				4, 50	A2h, 1071, X	A2h, 1071, X	242Fh	1598	0, 0, 1, 042Fh			
Master Torque Reference (Q12)	R				4, 53	A2h, 1074, X	A2h, 1074, X	2432h	1601	0, 0, 1, 0432h			
Fieldbus Torque Reference (Q12)	R				4, 54	A2h, 1075, X	A2h, 1075, X	2433h	1602	0, 0, 1, 0433h			
Motor Speed	R				4, 60	A2h, 1081, X	A2h, 1081, X	2439h	1608	0, 0, 1, 0439h			
Motor Current	R				4, 61	A2h, 1082, X	A2h, 1082, X	243Ah	1609	0, 0, 1, 043Ah			
Motor Power	R				4, 63	A2h, 1084, X	A2h, 1084, X	243Ch	1611	0, 0, 1, 043Ch			
PID controller Output Speed	R				4, 64	A2h, 1085, X	A2h, 1085, X	243Dh	1612	0, 0, 1, 043Dh			
Drive Scaling Value 1	R	75			4, 68	A2h, 1089, X	A2h, 1089, X	2441h	1616	0, 0, 1, 0441h			
Drive Scaling Value 2	R	76			4, 69	A2h, 1090, X	A2h, 1090, X	2442h	1617	0, 0, 1, 0442h			
Extension IO Input Status	R				4, 72	A2h, 1093, X	A2h, 1093, X	2445h	1620	0, 0, 1, 0445h			
Scope Channel 1 Data	R				4, 80	A2h, 1101, X	A2h, 1101, X	244Dh	1628	0, 0, 1, 044Dh			
Scope Channel 2 Data	R				4, 81	A2h, 1102, X	A2h, 1102, X	244Eh	1629	0, 0, 1, 044Eh			
Scope Channel 3 Data	R				4, 82	A2h, 1103, X	A2h, 1103, X	244Fh	1630	0, 0, 1, 044Fh			
Scope Channel 4 Data	R				4, 83	A2h, 1104, X	A2h, 1104, X	2450h	1631	0, 0, 1, 0450h			
OLED Language Index	R				4, 84	A2h, 1105, X	A2h, 1105, X	2451h	1632	0, 0, 1, 0451h			
OLED version	R				4, 85	A2h, 1106, X	A2h, 1106, X	2452h	1633	0, 0, 1, 0452h			
Power Unit	R				4, 86	A2h, 1107, X	A2h, 1107, X	2453h	1634	0, 0, 1, 0453h			
Service Timer	R				4, 107	A2h, 1128, X	A2h, 1128, X	2468h	1655	0, 0, 1, 0468h			
Stir Fan Speed	R				4, 108	A2h, 1129, X	A2h, 1129, X	2469h	1656	0, 0, 1, 0469h			

4.7.12. Function Block Program Variables

Parameter Name	R/W	Modbus RTU Register Number	CAN Open Index	CAN Open Sub Index	Profibus DP	DeviceNet	EtherNet IP	EtherCAT	Modbus TCP	Profinet IO	Scaling	Type	
User Analog Output 1	R/W	66	202Fh	0h	4, 11	A2h, 1032, X	A2h, 1032, X	2408h	1559	0, 0, 1, 0408h		U16	Write only possible when P9-33 = 1 and the Output is not controlled by the Function Block Program
User Analog Output 2	R/W	67	2030h	0h	4, 12	A2h, 1033, X	A2h, 1033, X	2409h	1560	0, 0, 1, 0409h		U16	Write only possible when P9-34 = 1 and the Output is not controlled by the Function Block Program
User Relay Output 1	R/W	70	2033h	0h	4, 15	A2h, 1036, X	A2h, 1036, X	240Ch	1563	0, 0, 1, 040Ch		U16	Write only possible when P9-35 = 1 and the Output is not controlled by the Function Block Program
User Relay Output 2	R/W	71	2034h	0h	4, 16	A2h, 1037, X	A2h, 1037, X	240Dh	1564	0, 0, 1, 040Dh		U16	Write only possible when P9-36 = 1 and the Output is not controlled by the Function Block Program
User Relay Output 3	R/W	72	2035h	0h	4, 17	A2h, 1038, X	A2h, 1038, X	240Eh	1565	0, 0, 1, 040Eh		U16	Write only possible when P9-41 = 1 and the Output is not controlled by the Function Block Program
User Relay Output 4	R/W	73	2036h	0h	4, 18	A2h, 1039, X	A2h, 1039, X	240Fh	1566	0, 0, 1, 040Fh		U16	Write only possible when P9-41 = 1 and the Output is not controlled by the Function Block Program
User Relay Output 5	R/W	74	2037h	0h	4, 19	A2h, 1040, X	A2h, 1040, X	2410h	1567	0, 0, 1, 0410h		U16	Write only possible when P9-41 = 1 and the Output is not controlled by the Function Block Program
User Scaling Value	R/W	75			4, 20	A2h, 1041, X	A2h, 1041, X	2411h	1568	0, 0, 1, 0411h			
User Scaling Decimal	R/W	76			4, 21	A2h, 1042, X	A2h, 1042, X	2412h	1569	0, 0, 1, 0412h			
User Speed Reference	R/W	77			4, 22	A2h, 1043, X	A2h, 1043, X	2413h	1570	0, 0, 1, 0413h			
User Torque Reference	R/W	78			4, 23	A2h, 1044, X	A2h, 1044, X	2414h	1571	0, 0, 1, 0414h			
User Display Ctrl	R/W				4, 28	A2h, 1049, X	A2h, 1049, X	2419h	1576	0, 0, 1, 0419h			
User Display Value	R/W				4, 29	A2h, 1050, X	A2h, 1050, X	241Ah	1577	0, 0, 1, 041Ah			
PID User Reference (Q12)	R				4, 55	A2h, 1076, X	A2h, 1076, X	2434h	1603	0, 0, 1, 0434h			
PID User Feedback (Q12)	R				4, 56	A2h, 1077, X	A2h, 1077, X	2435h	1604	0, 0, 1, 0435h			
User Register 1	R/W	51	2020h	0h	3, 251	A2h, 1017, X	A2h, 1017, X	23F9h	1544	0, 0, 1, 03F9h			
User Register 2	R/W	52	2021h	0h	3, 252	A2h, 1018, X	A2h, 1018, X	23FAh	1545	0, 0, 1, 03FAh			
User Register 3	R/W	53	2022h	0h	3, 253	A2h, 1019, X	A2h, 1019, X	23FBh	1546	0, 0, 1, 03FBh			
User Register 4	R/W	54	2023h	0h	3, 254	A2h, 1020, X	A2h, 1020, X	23FCh	1547	0, 0, 1, 03FCh			
User Register 5	R/W	55	2024h	0h	4, 0	A2h, 1021, X	A2h, 1021, X	23FDh	1548	0, 0, 1, 03FDh			
User Register 6	R/W	56	2025h	0h	4, 1	A2h, 1022, X	A2h, 1022, X	23FEh	1549	0, 0, 1, 03FEh			
User Register 7	R/W	57	2026h	0h	4, 2	A2h, 1023, X	A2h, 1023, X	23FFh	1550	0, 0, 1, 03FFh			
User Register 8	R/W	58	2027h	0h	4, 3	A2h, 1024, X	A2h, 1024, X	2400h	1551	0, 0, 1, 0400h			
User Register 9	R/W	59	2028h	0h	4, 4	A2h, 1025, X	A2h, 1025, X	2401h	1552	0, 0, 1, 0401h			
User Register 10	R/W	60	2029h	0h	4, 5	A2h, 1026, X	A2h, 1026, X	2402h	1553	0, 0, 1, 0402h			
User Register 11	R/W	61	202Ah	0h	4, 6	A2h, 1027, X	A2h, 1027, X	2403h	1554	0, 0, 1, 0403h			
User Register 12	R/W	62	202Bh	0h	4, 7	A2h, 1028, X	A2h, 1028, X	2404h	1555	0, 0, 1, 0404h			
User Register 13	R/W	63	202Ch	0h	4, 8	A2h, 1029, X	A2h, 1029, X	2405h	1556	0, 0, 1, 0405h			
User Register 14	R/W	64	202Dh	0h	4, 9	A2h, 1030, X	A2h, 1030, X	2406h	1557	0, 0, 1, 0406h			
User Register 15	R/W	65	202Eh	0h	4, 10	A2h, 1031, X	A2h, 1031, X	2407h	1558	0, 0, 1, 0407h			
User Register 16	R/W	81											
User Register 17	R/W	82											
User Register 18	R/W	83											
User Register 19	R/W	84											
User Register 20	R/W	85											
User Register 21	R/W	86											
User Register 22	R/W	87											
User Register 23	R/W	88											
User Register 24	R/W	89											
User register 25	R/W	90											
User Register 26	R/W	91											
User Register 27	R/W	92											
User Register 28	R/W	93											
User Register 29	R/W	94											
User Register 30	R/W	95											
User Register 31	R/W	96											

4.7.13. Process Data Address

ADI No.		Length	R/W	Profibus DP	DeviceNet	EtherNet IP	EtherCAT	Modbus TCP	Profinet IO
1	Process Input Data	8	W	PDI 0	PDI 0	PDI 0	PDI 0	0 ~ 3	PDI 0
2	Process Output Data	8	R	PDO 0	PDO 0	PDO 0	PDO 0	256~259	PDO 0

5. Diagnostic and Fault Messages

Fault Code	No.	Description	Fault Code	No.	Description
no-Flt	00	No Fault	AtF-01	40	Measured motor stator resistance varies between phases.
OI-b	01	Brake channel over current	AtF-02	41	Measured motor stator resistance is too large.
OL-br	02	Brake resistor overload	AtF-03	42	Measured motor inductance is too low.
O-I	03	Instantaneous over current	AtF-04	43	Measured motor inductance is too large.
I.t-trp	04	Motor Thermal Overload (I2t)	Out-Ph	44	Output (motor) phase missing
SAFE-1	05	Safety input circuit error (Processor output)	Ph-Seq	45	Supply Phase SequenceIncorrect (FS8 Only)
O-Volt	06	Over voltage on DC bus	AtF-07	46	Reserved
U-Volt	07	Under voltage on DC bus	AtF-08	47	Reserved
O-t	08	Heatsink over temperature	AtF-09	48	Reserved
U-t	09	Under temperature	Out-Ph	49	Output (Motor) phase loss
P-dEF	10	Factory Default parameters have been loaded	SC-F01	50	Modbus comms loss fault
E-trip	11	External trip	SC-F02	51	CANopen comms loss trip
SC-ObS	12	Optibus comms loss	SC-F03	52	Anybus module comms loss trip
FLt-dc	13	DC bus ripple too high	SC-F04	53	IO card comms loss trip
P-LOSS	14	Input phase loss trip	SC-F05	54	Reserved
h O-I	15	Instantaneous over current on drive output.	SC-F06	55	Reserved
th-Flt	16	Faulty thermistor on heatsink.	SC-F07	56	Reserved
dAtA-F	17	Internal memory fault. (IO)	SC-F08	57	Reserved
4-20 F	18	4-20mA Signal Lost	SC-F09	58	Reserved
dAtA-E	19	Internal memory fault. (DSP)	SC-F10	59	Reserved
U-dEF	20	User Default Parameters Loaded	OF-01	60	Internal link to option module loss
F-Ptc	21	Motor PTC thermistor trip	OF-02	61	Option module in exceptional condition
FAN-F	22	Cooling Fan Fault	OF-03	62	Reserved
O-hEAt	23	Environmental temperature too high	OF-04	63	Reserved
O-torq	24	Reserved	OF-05	64	Reserved
U-torq	25	Output torque too low (hoist mode)	OF-06	65	Reserved
Out-F	26	Drive output fault	OF-07	66	Reserved
Err-01	27	Reserved	OF-08	67	Reserved
Err-02	28	Reserved	OF-09	68	Reserved
SAFE-2	29	Safety input circuit error (Buffer output)	OF-10	69	Reserved
Enc-01	30	Encoder comms/data loss	PLC-01	70	Unsupported Function Block Program block
SP-Err	31	Speed error	PLC-02	71	Function Block Program over size
Enc-03	32	Incorrect Encoder PPR count set in parameters	PLC-03	72	Divide by 0
Enc-04	33	Encoder Channel A Fault	PLC-04	73	Lower limit larger than higher limit
Enc-05	34	Encoder Channel B Fault	PLC-05	74	Table function block index overflow
Enc-06	35	Encoder Channels A & B Fault	PLC-06	75	Reserved
Enc-07	36	Reserved	PLC-07	76	Reserved
Enc-08	37	Reserved	PLC-08	77	Reserved
Enc-09	38	Reserved	PLC-09	78	Reserved
Enc-10	39	Reserved	PLC-10	79	Reserved

6. Rated Temperatures and De-rating curves

6.1. Thermal Management

The Optidrive P2 product range has an integrated Thermal Management function. This function allows the drive to automatically reduce the effective switching frequency when operating at higher heatsink temperatures to avoid the risk of an over temperature trip. The value set in the Thermal Management parameter (P6-02) determines the lowest switching frequency the drive is permitted to automatically reduce to. Table 1 below shows the heatsink temperature threshold points at which thermal management occurs.

Supply Voltage	Effective Switching Frequency (Where Supported)	Temperature Limit for Switching Frequency Redcution	Temperature Limit for Over Temperature Trip
230 & 400	32kHz	70°C	80°C
	24kHz	75°C	83°C
	16kHz	80°C	86°C
	12kHz	85°C	89°C
	8kHz	90°C	92°C
	4kHz	N/A	95°C
600	32kHz	70°C	75°C
	24kHz	75°C	79°C
	16kHz	80°C	83°C
	12kHz	85°C	87°C
	8kHz	90°C	91°C
	4kHz	N/A	95°C

NOTE

The available range of switching frequencies is subject to the drive frame size, power rating and voltage rating.

6.2. De-rating Curves Explained

The following de-rating curves each show the maximum continuous output current against drive heatsink temperature. In each graph the curves represent the performance of the largest rated drive for that frame size and rated voltage for each available switching frequency. Where lower power rating variants are available their limits are shown as dotted lines to intersect the curves.

6.3. Size 2, 200-240V

6.3.1. 4.3A, 7A & 10.5A Output, IP20

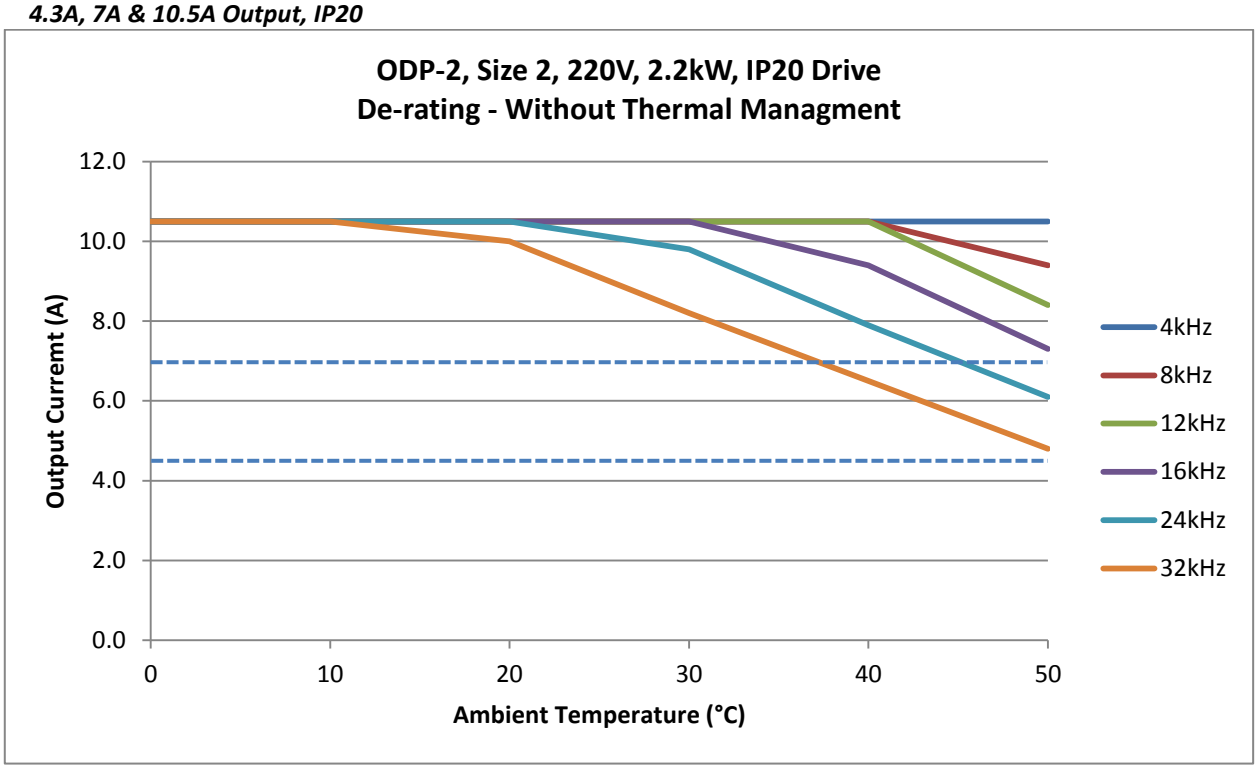

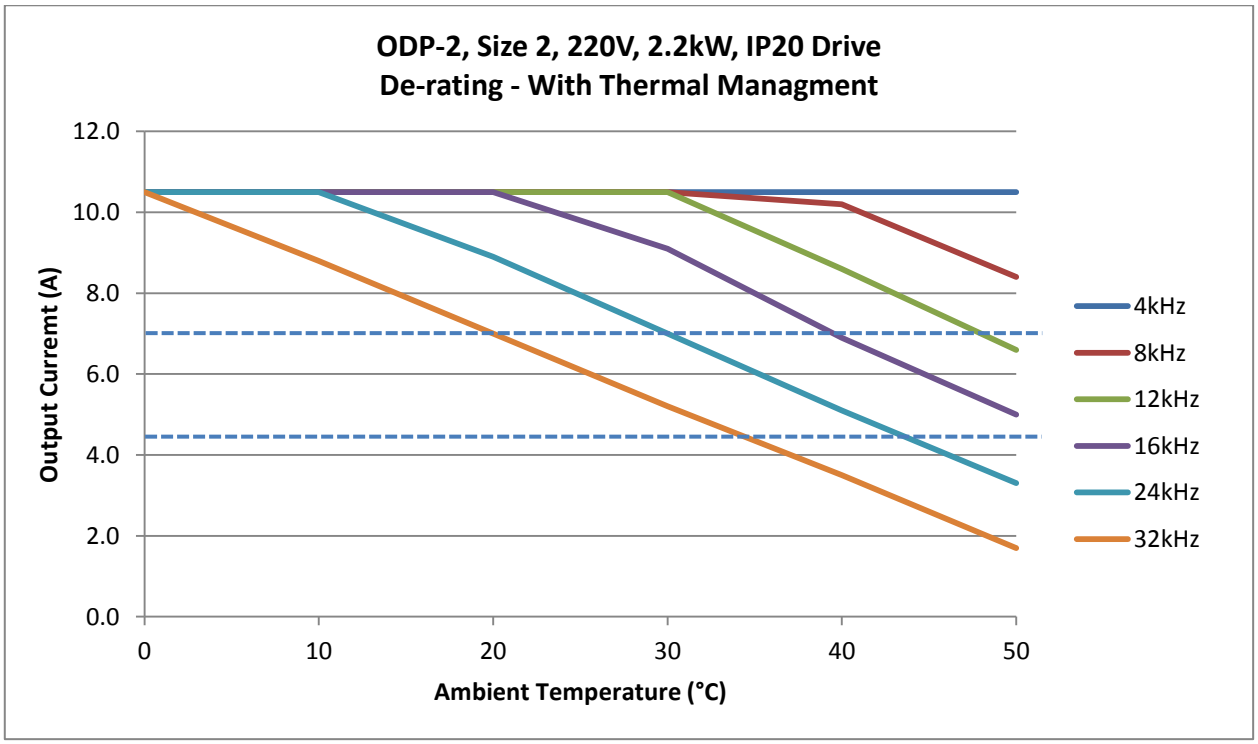

6.3.2. 4.3A, 7A & 10.5A Output, IP66

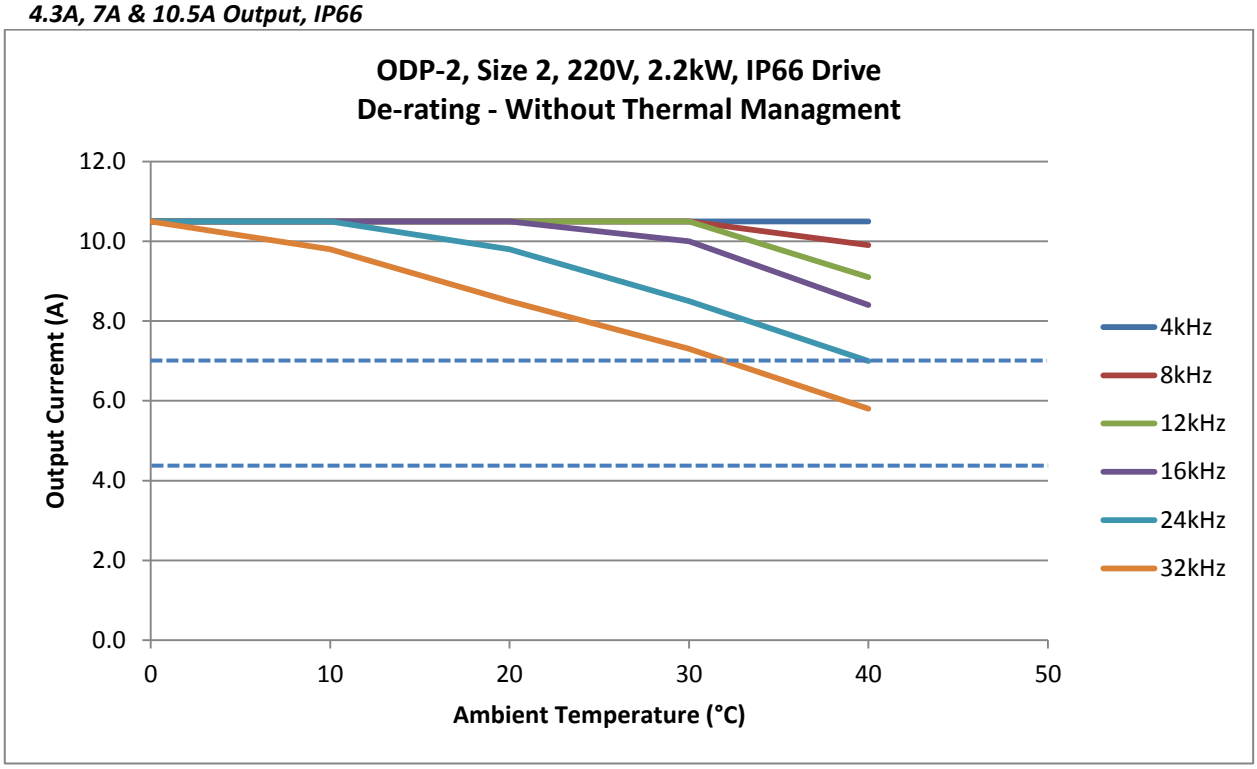

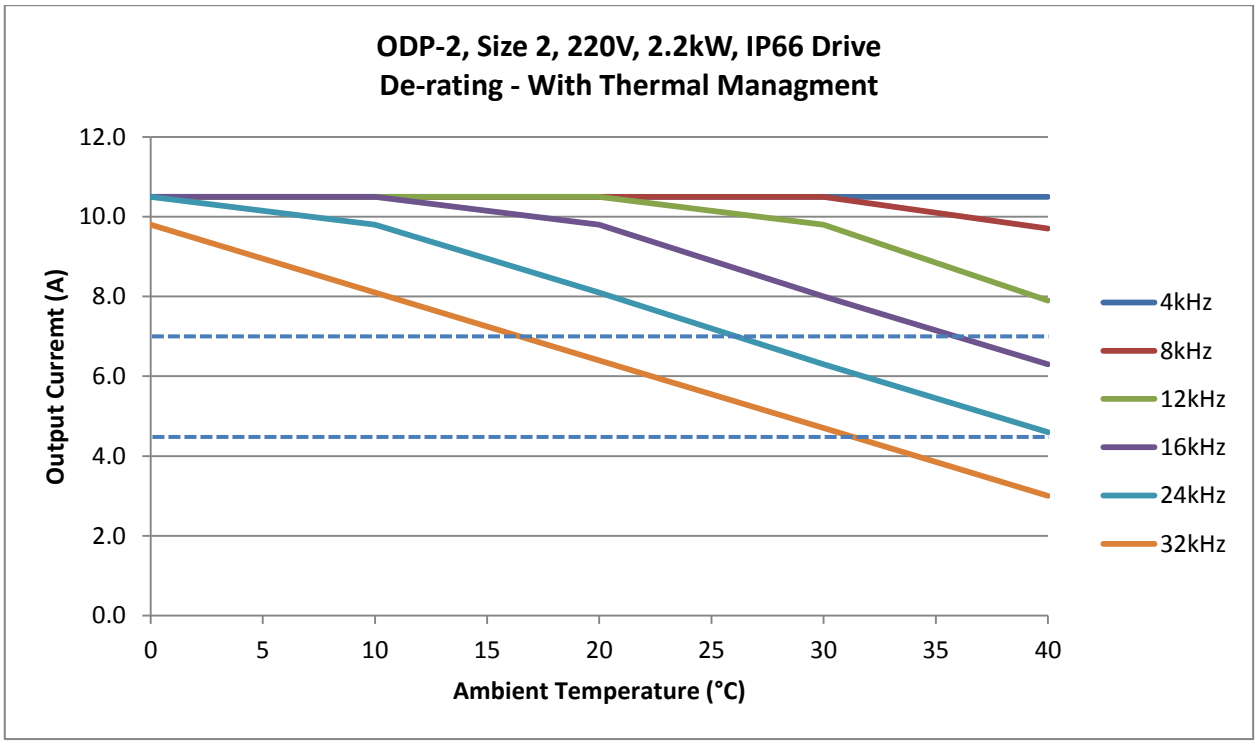

6.4. Size 2, 380-480V

6.4.1. 2.2A, 4.1A, 5.8A, 9.5A Output, IP20

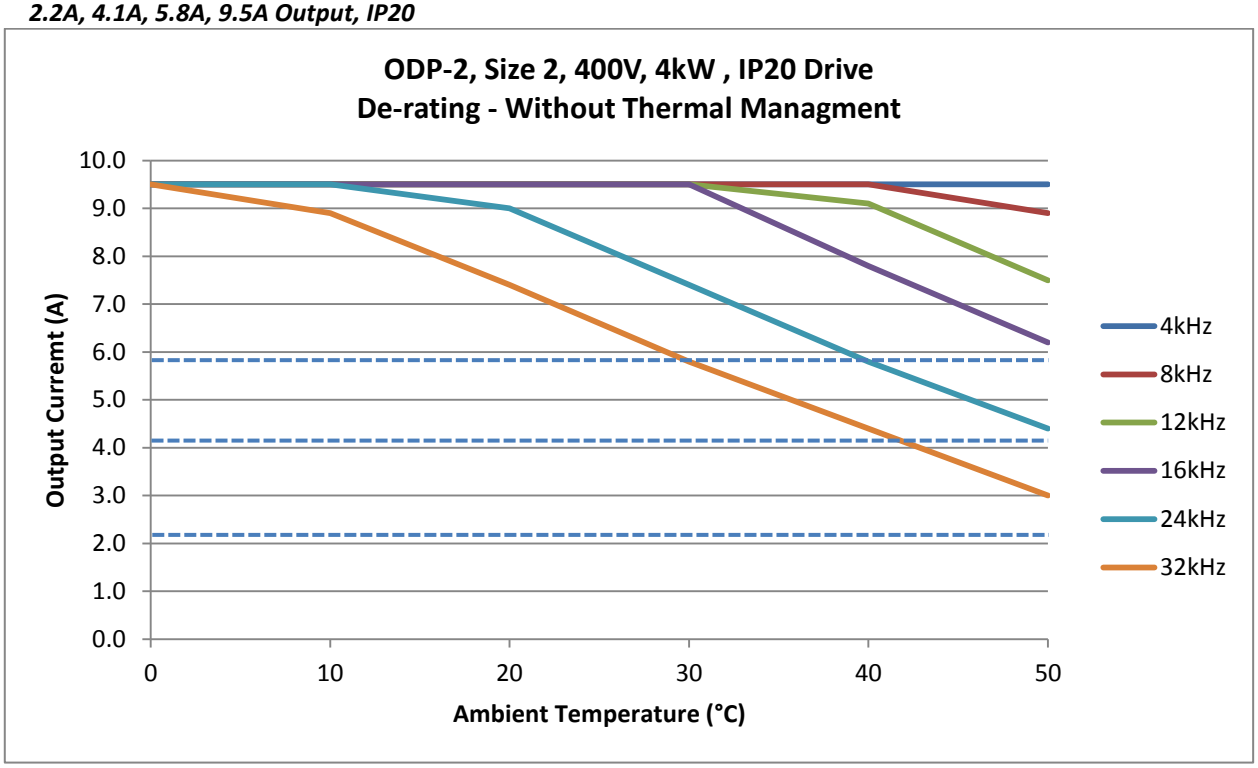

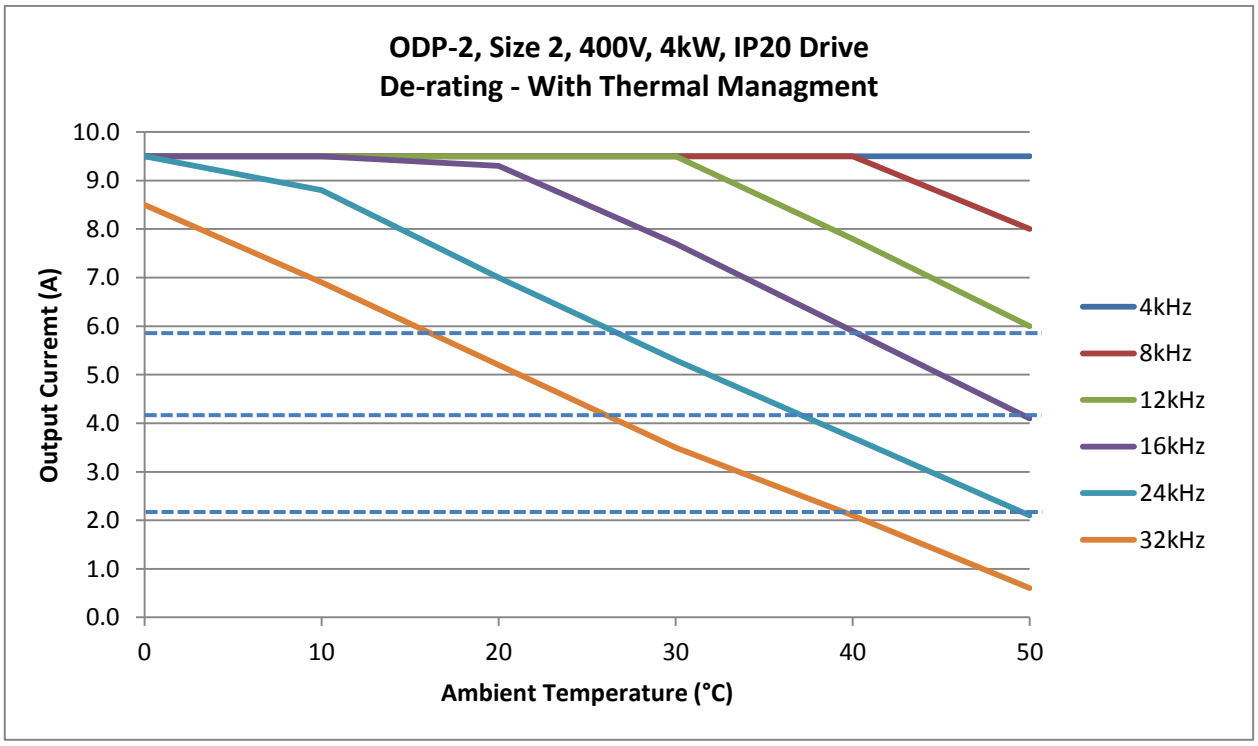

6.4.2. 2.2A, 4.1A, 5.8A, 9.5A Output, IP66

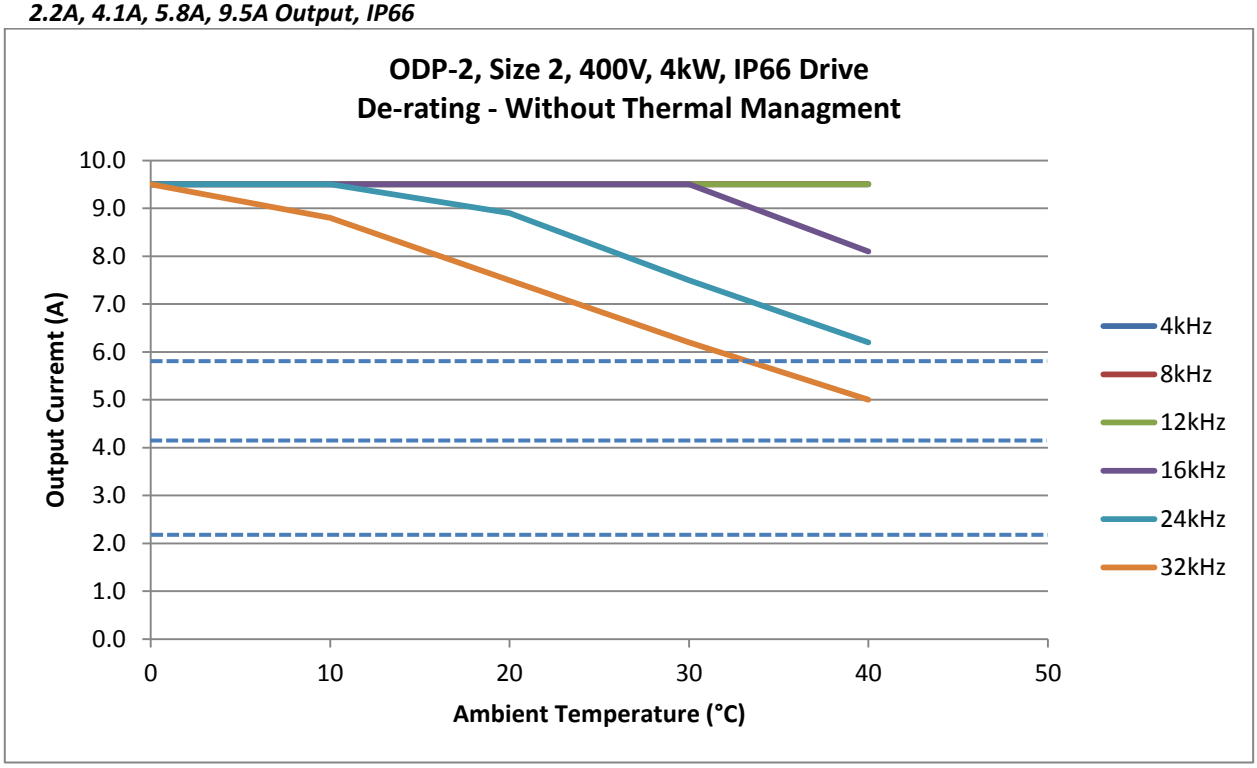

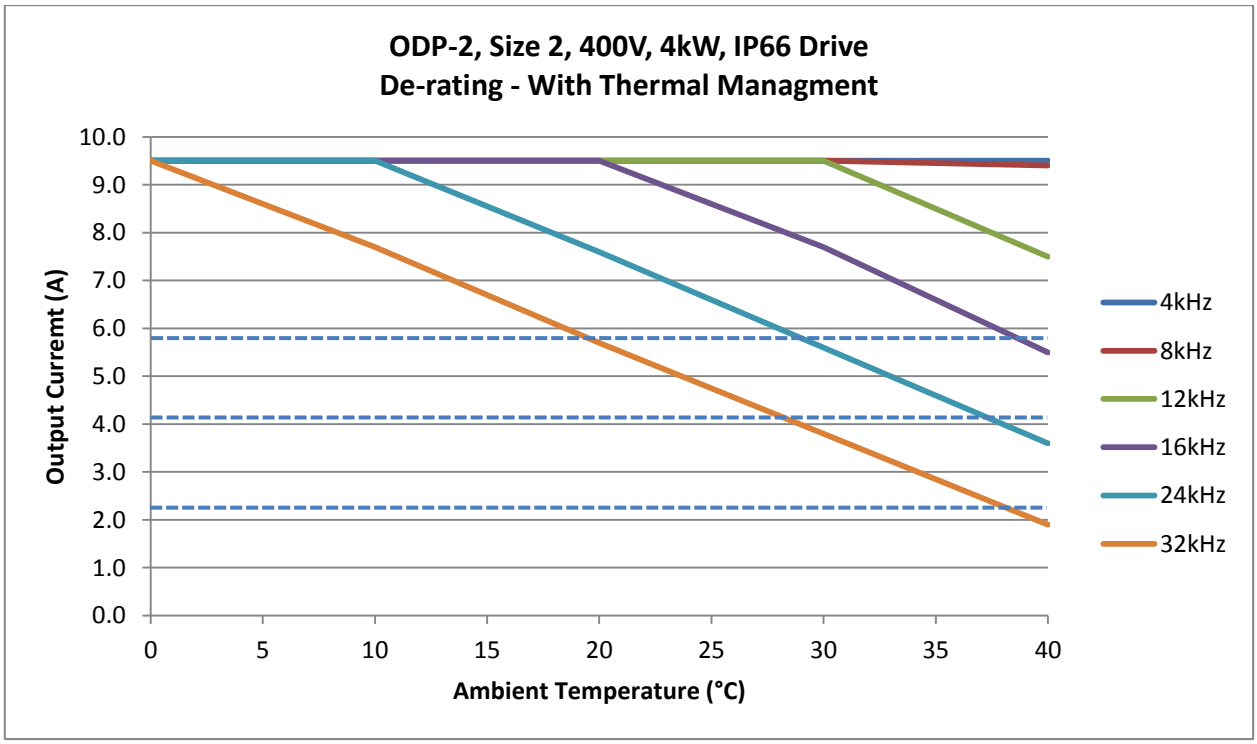

6.5. Size 3, 200-240V & 380 – 480V

6.5.1. 14A, 15.3A, 18A & 24A Output , IP20

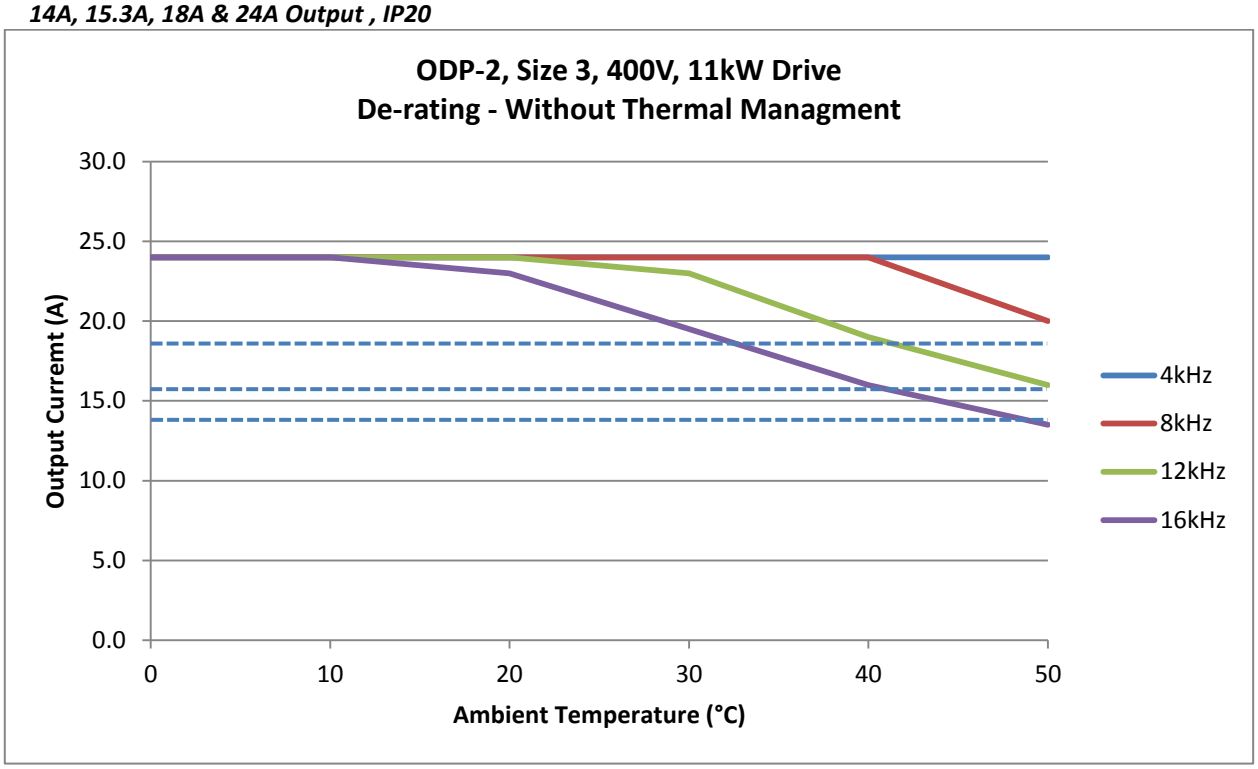

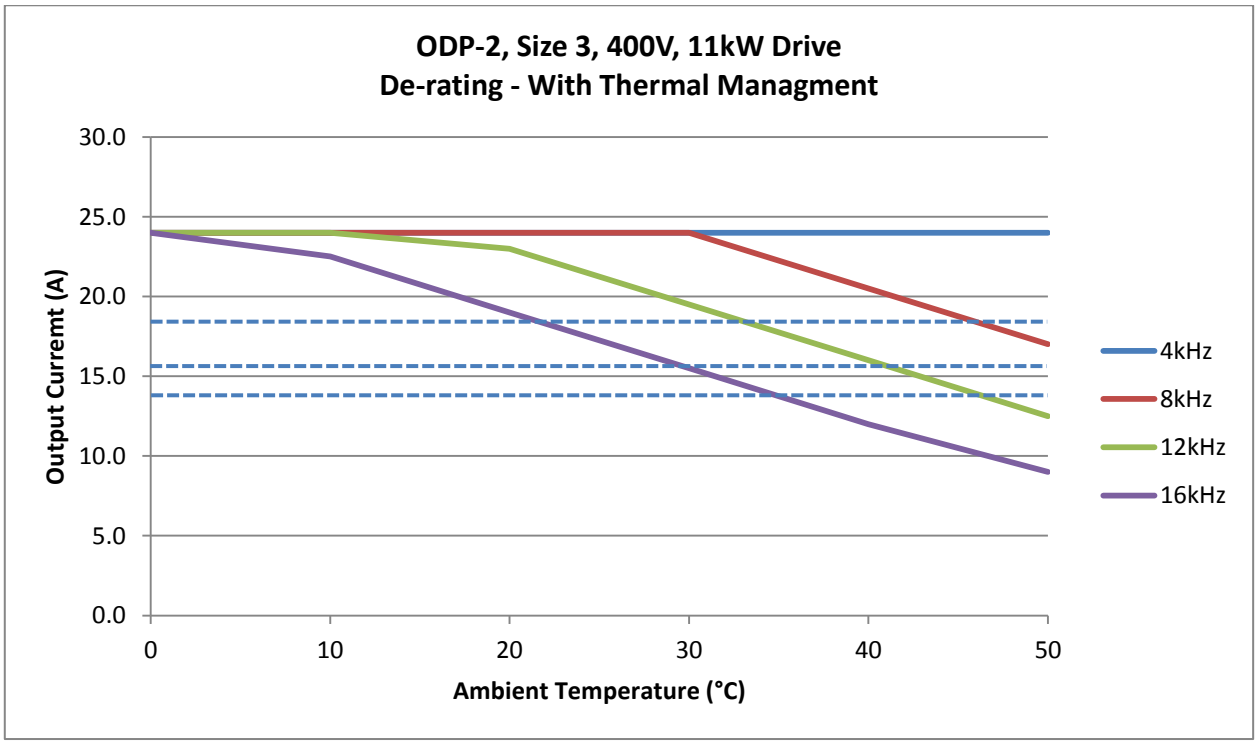

6.5.2. 14A, 15.3A, & 18A Output , IP66

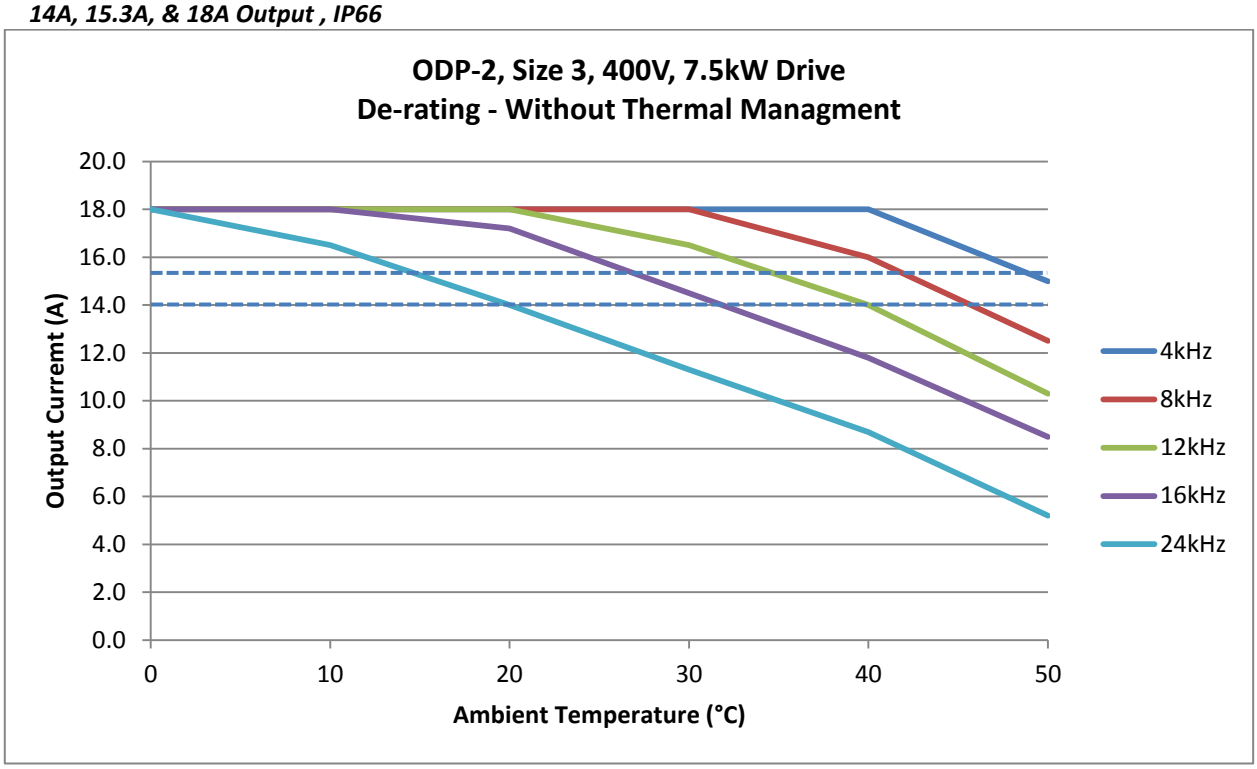

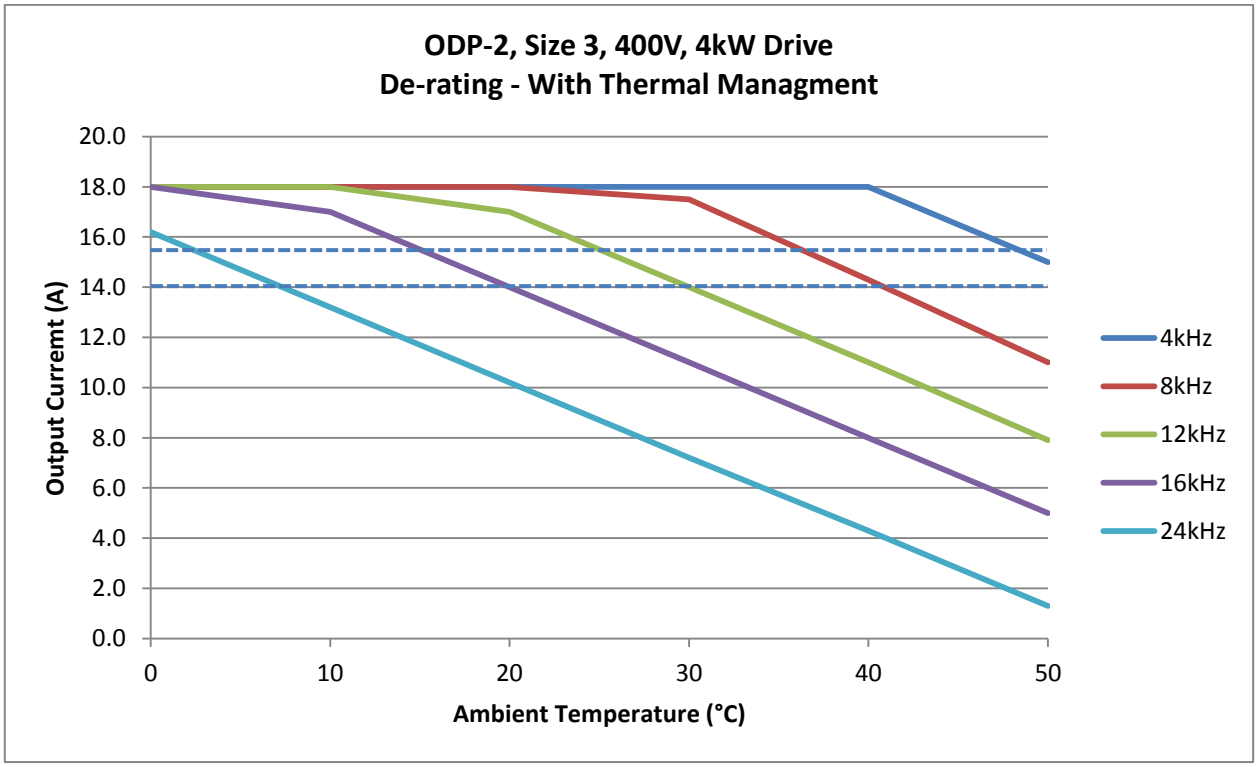

6.6. Size 4, 200 – 240V & 380-480V,

6.6.1. 24A, 30A, 39A & 46A, IP55

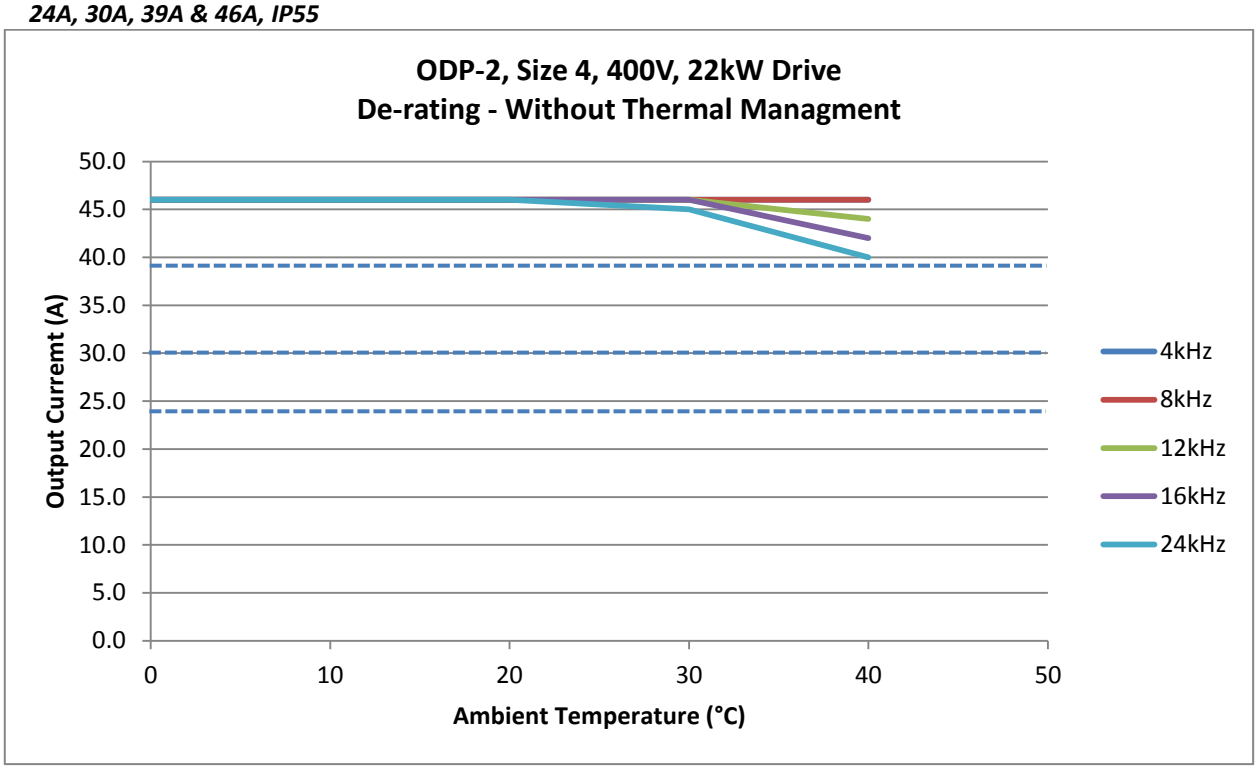

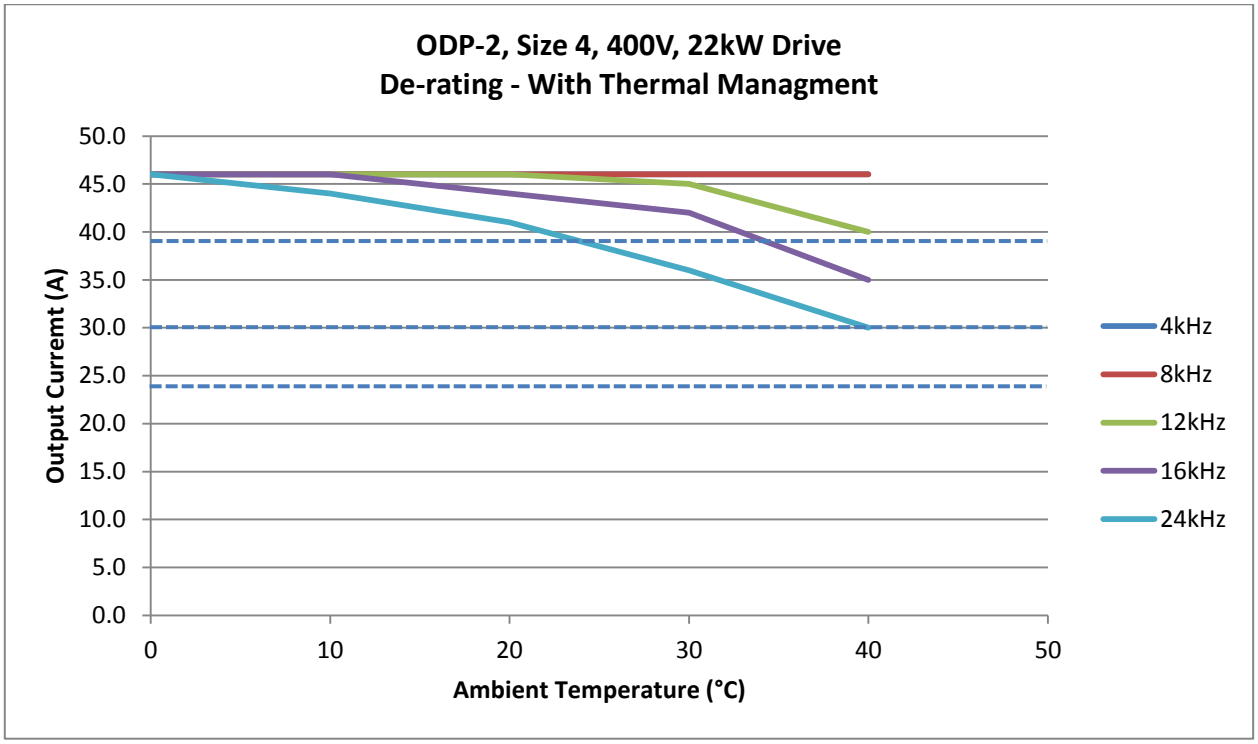

6.7. Size 5, 200 – 240V & 380-480V,

6.7.1. 61A & 72A Output, IP55

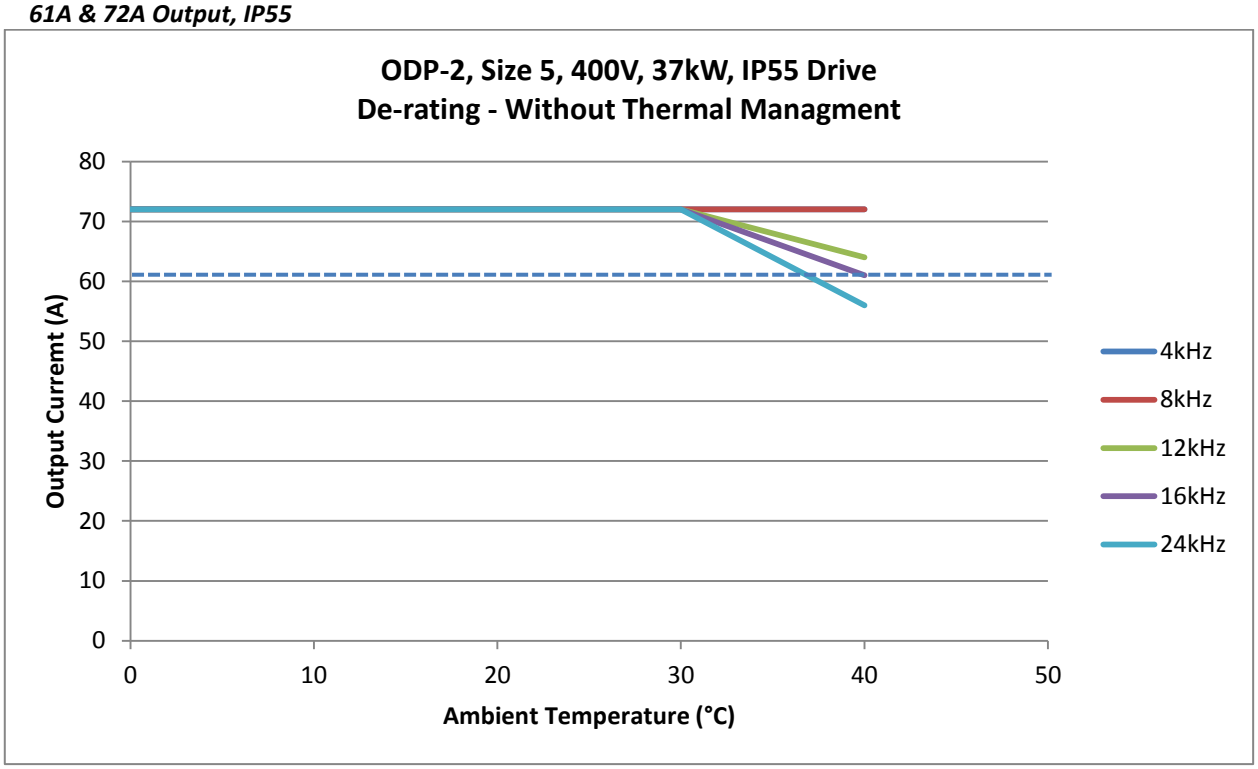

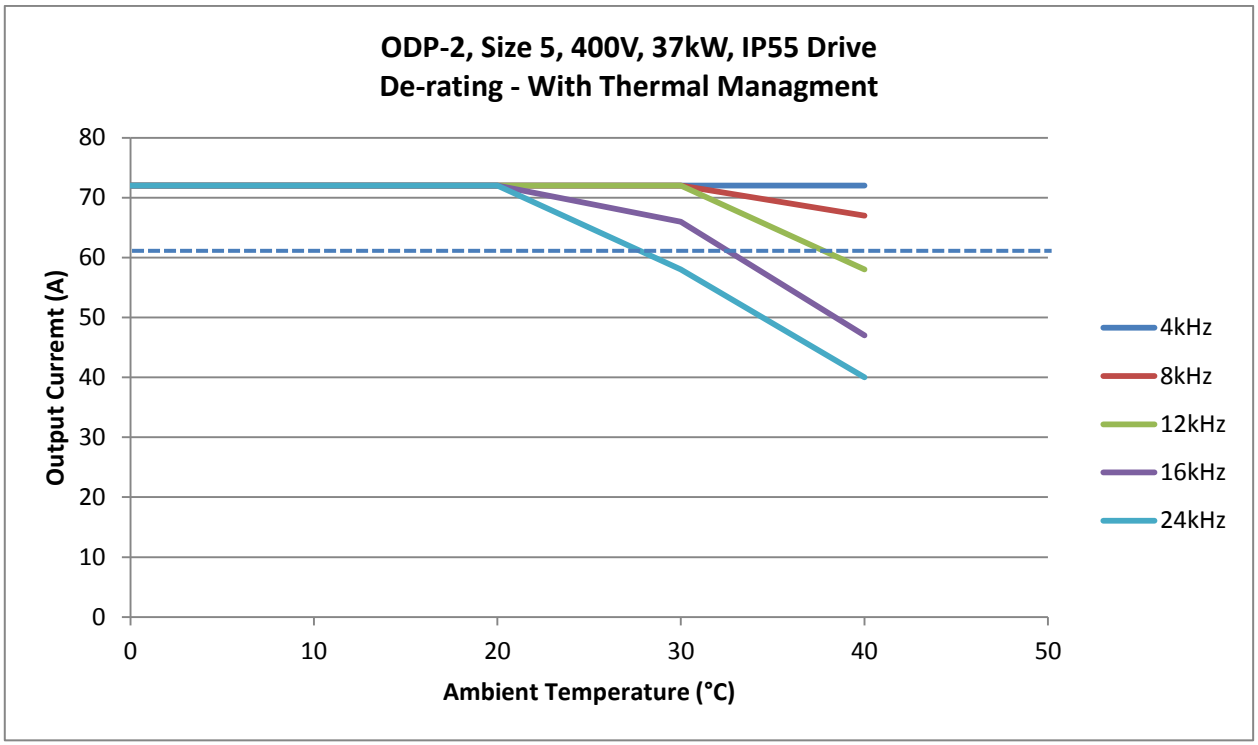

6.8. Size 6, 200 – 240V & 380-480V,

6.8.1. 90A, 110A, 150A & 180A Output, IP55

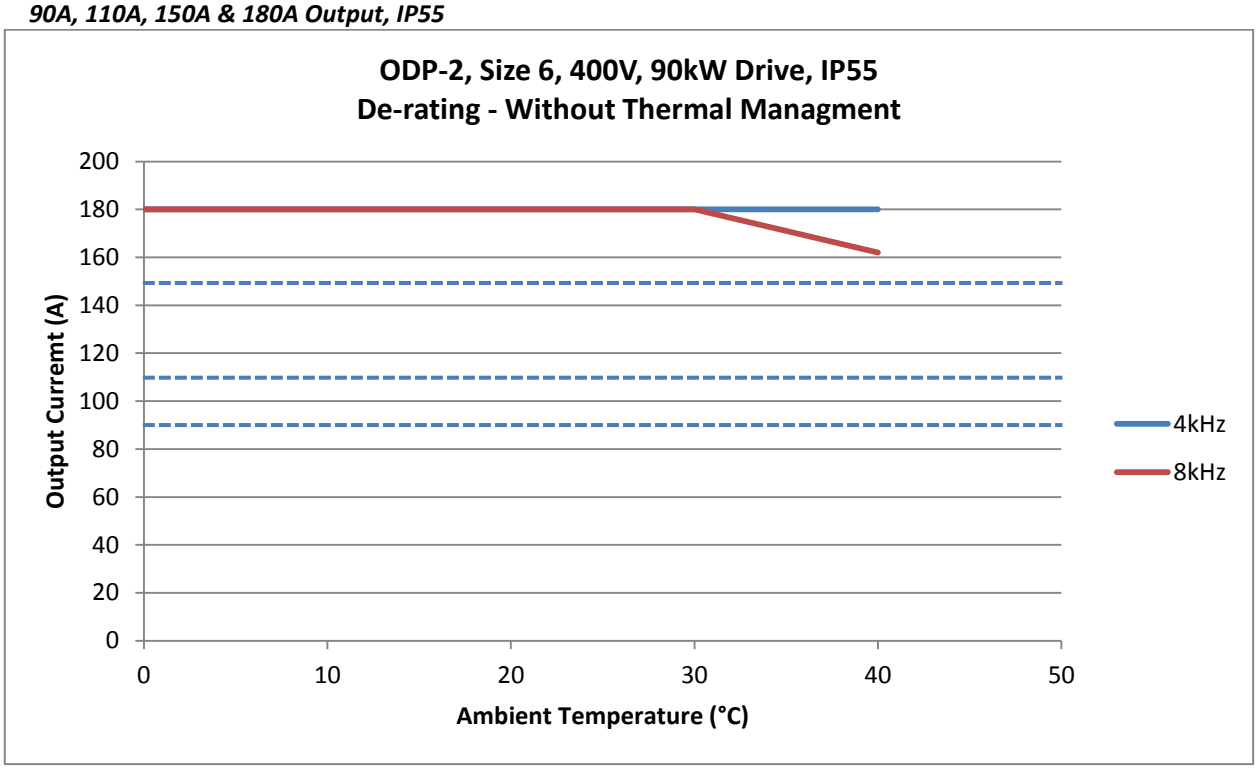

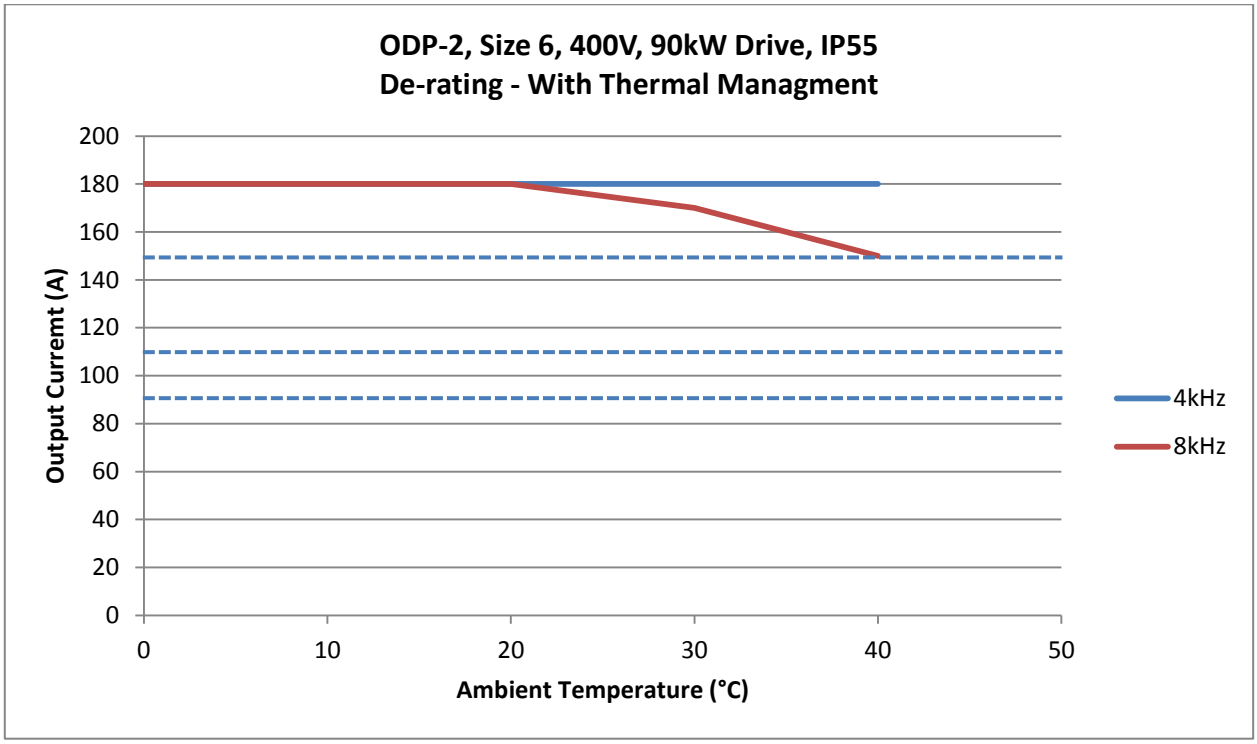

6.9. Size 7, 200 – 240V & 380-480V,

6.9.1. 202A, 240A, 302A Output, IP55

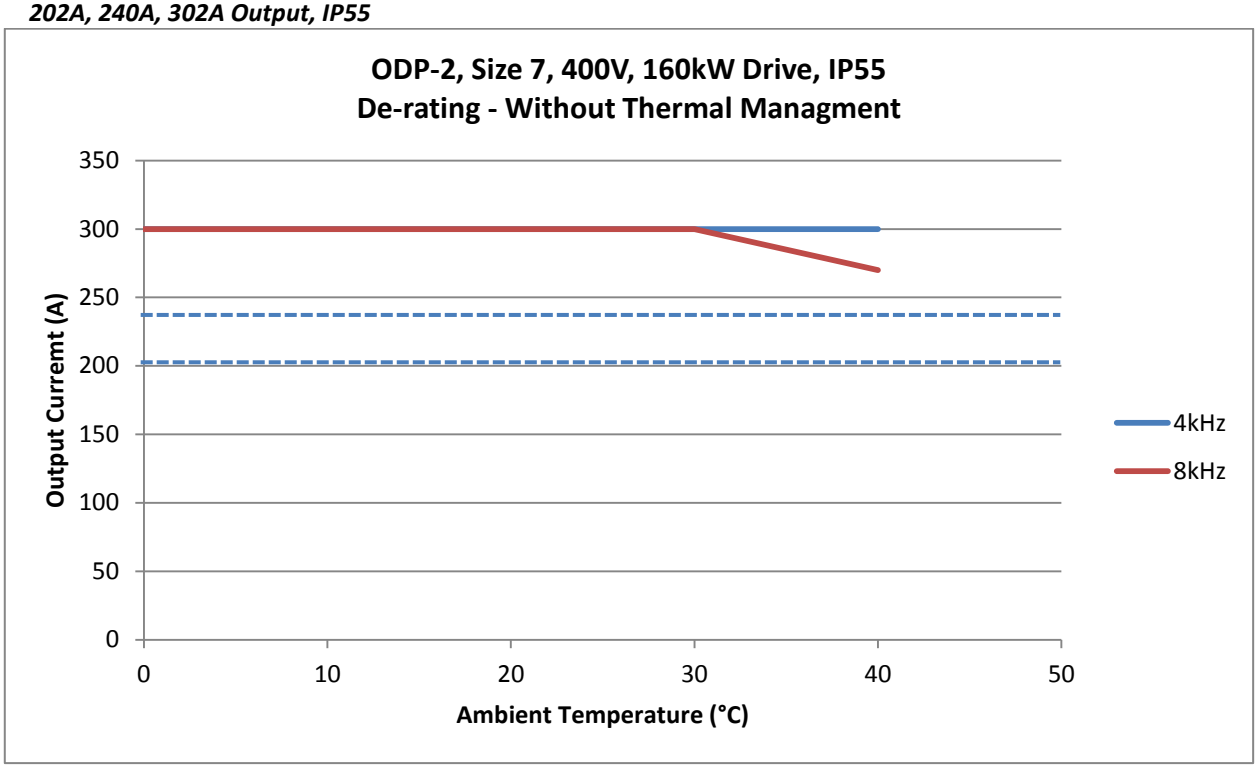

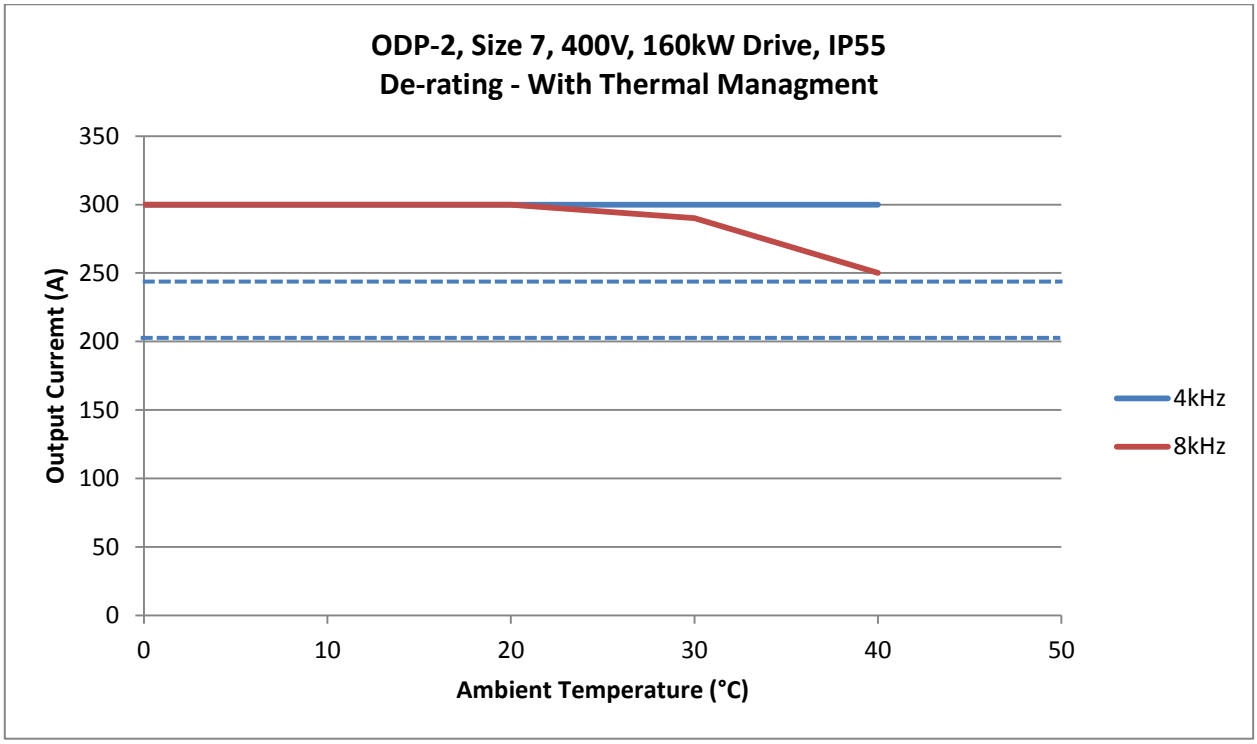

7. Immunity Tests

7.1. Electrostatic Discharge (ESD)

The Optidrive P2 and HVAC (ODP-2 and ODV-2) product range have been designed and tested to comply with the limits defined in EN 61800-3:2004+A1-2012. The test techniques used are as defined in EN 61000-4-2:2009.

Application	Test points	Test Method	Level
Direct	Control Terminals	Contact Discharge	±4kV
		Air Discharge	±8kV
	Power Terminals	Air Discharge	±8kV
Indirect	Vertical coupling plane	Contact Discharge	±4kV
	Horizontal coupling plane	Contact Discharge	±4kV

7.2. Electrical Fast Transient Burst (EFT/B)

The Optidrive P2 and HVAC (ODP-2 and ODV-2) product range have been designed and tested to comply with the limits defined in EN 61800-3: 2004+A1-2012. The test techniques used are as defined in EN 61000-4-4:2004.

Test points	Test Method	Level
Control Terminals	Capacitive clamp	±1kV at 5kHz
Motor Power Terminals	Capacitive clamp	±2kV at 5kHz
1-PH Supply Power Terminals	Coupling Decoupling Network	±2kV at 5kHz
3-PH Supply Power Terminals	Capacitive clamp	±4kV at 5kHz

7.3. Surge

The Optidrive P2 and HVAC (ODP-2 and ODV-2) product range have been designed and tested to comply with the limits defined in EN 61800-3: 2004+A1-2012. The test techniques used are as defined in EN 61000-4-5:2006.

Drive Type	Test Method	Level
200-240V	Line to Line/Neutral	±1kV
	Line/Neutral to Earth	±2kV
380-480V	Line to Line	±2kV
	Line to Earth	±4kV

7.4. Dielectric strength (Flash)

The Optidrive P2 and HVAC (ODP-2 and ODV-2) product range have been designed and tested to comply with the limits defined in EN 61800-5-1: 2007. The test techniques used are as defined in EN 61800-5-1: 2007.

Drive Type	Level
200-240V	1.5kV
380-480V	2.5kV

8. General Technical and Performance Data

8.1. Electrical Data

8.1.1. Mains Supply Details	
Supply Voltage Range	230 Volt Units – 200 – 240 Volt +10% / -10% 400 Volt Units – 380 – 480 Volt +10% / -10% 600 Volt Units – 500 – 600 Volt +10% / -10%
Supply Frequency	48 – 62Hz
Inrush Current	< rated input current
Power Up Cycles	>120x /hr, evenly spaced
Single Phase Operation	Three phase drives can be operated from a single phase supply with 50% derating of the maximum output current
8.1.2. Motor Control	
Output Frequency Range	0 to 500Hz in 0.1 Hz steps High Frequency Option Available, up to 2000Hz depending on model rating. Max Output Frequency = Max Switching Frequency / 16.
Output Voltage Range	0 to Supply Voltage
Speed Regulation	Open Loop < 2% motor rated speed
Torque Control	0 – 200% of rated torque, + / -5% accuracy, Response time <10ms
Effective Switching Frequency	Refer to section 2.1
Acceleration Time	Four independent acceleration ramps 0 – 600 seconds, 0.01s resolution (Frame 2 & 3) 0 – 6000 seconds, 0.1s resolution (Frame 4 & above)
Deceleration Time	Four individual deceleration ramps 0 – 600 seconds, 0.01s resolution (Frame 2 & 3) 0 – 6000 seconds, 0.1s resolution (Frame 4 & above)
8.1.3. Overload Capacity	
Overload Capacity	150% of rated current for 60 seconds, repeat cycle every 10 minutes. 200% / 4 seconds

8.2. Input Output Current Ratings

8.2.1. 230V Input

Frame Size	Supply Voltage	Power Rating (kW)	Input Current (A)	iTHD (%)	AC Line Choke	Input Current (A)	iTHD (%)	Output Current (A)
2	230V, 1ph	0.75	8.6	125	OPT-2-L1016-20	4.9		4.3
		1.5	12.9	105.8	OPT-2-L1016-20	13.5		7.0
		2.2	19.2	97	OPT-2-L1025-20	17.3		10.5
	230V, 3ph	0.75	5.7	177.8	OPT-2-L3006-20	4.0	53.6	4.3
		1.5	10.5	155.0	OPT-2-L3006-20	6.2	39.4	7.0
		2.2	13.2	147.2	OPT-2-L3010-20	9.2	33.1	10.5
3	230V, 3ph	4.0	20.9	115.5	OPT-2-L3036-20	16.0	37.0	18
		5.5	26.4	102.7	OPT-2-L3036-20	21.4	33.1	24
4	230V, 3ph	5.5	26.9	117	OPT-2-L3036-20	21.5	33.1	24
		7.5	33.3	108	OPT-2-L3036-20	26.9	35.2	30
		11	50.1	99.1	OPT-2-L3050-20	40.3	27.6	46
5	230V, 3ph	15	63.9	88	OPT-2-L3090-20	54.2	32.4	61
		18.5	74.0	84.8	OPT-2-L3090-20	64	32.4	72
6	230V, 3ph	22	99.1	93.7	OPT-2-L3090-20	86.3	53.6	90
		30	121.0	88.8	OPT-2-L3200-00	102.9	47.3	110
		37	159.7	77.2	OPT-2-L3200-00	138.3	43.6	150
		45	187.5	72.6	OPT-2-L3200-00	164.2	37	180
7	230V, 3ph	55	206.5	57.5	OPT-2-L3200-00	188.6	43.6	202
		75	246.3	50.5	OPT-2-L3300-00	230.8	39.4	248

The data above is provided to show typical values. Results measured at the point of installation may vary according to the installation site and load conditions Test results are measured under the following conditions :-

- 230 Volt RMS AC Supply Voltage
- Operating IE2 motor with matching power rating according to the drive
- Operated at full rated output current capacity

8.2.2. 400 / 460 Volt Input

Frame Size	Supply Voltage	Power Rating (kW)	Input Current (A)	iTHD (%)	AC Line Choke	Input Current (A)	iTHD (%)	Output Current (A)
2	400V, 3ph	0.75	3.5	177.8	OPT-2-L3006-20	2.7	92.5	2.2
		1.5	5.6	155.0	OPT-2-L3006-20	4.5	64.5	4.1
		2.2	7.5	147.2	OPT-2-L3006-20	5.5	64.5	5.8
		4.0	11.5	124.3	OPT-2-L3010-20	8.9	47.3	9.5
3	400V, 3ph	5.5	17.2	126.3	OPT-2-L3036-20	14.5	53.6	14
		7.5	21.8	115.5	OPT-2-L3036-20	17.7	47.3	18
		11	27.5	102.7	OPT-2-L3036-20	21.9	43.6	24
4	400V, 3ph	11	28.0	117.0	OPT-2-L3036-20	21.9	43.6	24
		15	34.2	108.0	OPT-2-L3036-20	28.1	47.3	30
		18.5	44.1	104.0	OPT-2-L3050-20	35.4	39.4	39
		22	51.9	99.1	OPT-2-L3050-20	41.5	37	46
5	400V, 3ph	30	66.1	84.8	OPT-2-L3090-20	56.3	43.6	61
		37	77.3	88.8	OPT-2-L3090-20	65.4	39.4	72
6	400V, 3ph	45	102.7	93.8	OPT-2-L3090-20	91.6	64.5	90
		55	126.4	88.8	OPT-2-L3200-00	112	64.5	110
		75	164.7	77.2	OPT-2-L3200-00	147.4	53.6	150
		90	192.1	72.6	OPT-2-L3200-00	172.4	47.3	180
7	400V, 3ph	110	210.8	57.5	OPT-2-L3200-00	208.1	64.5	202
		132	241.0	50.5	OPT-2-L3300-00	238.6	53.6	240
		160	299.0	44.8	OPT-2-L3300-00	296.2	47.3	302
8	400V, 3ph	200	377.2	56.3	OPT-2-L3500-00	376.6	42.1	370
		250	458.7	56.3	OPT-2-L34500-00	429.4	42.1	450

The data above is provided to show typical values. Results measured at the point of installation may vary according to the installation site and load conditions Test results are measured under the following conditions :-

- 400 Volt RMS AC Supply Voltage
- Operating IE2 motor with matching power rating according to the drive
- Operated at full rated output current capacity

8.2.3. 525 Volt Input

Frame Size	Supply Voltage	Power Rating (kW)	Input Current (A)	iTHD (%)	AC Line Choke	Input Current (A)	iTHD (%)	Output Current (A)
7	525V, 3ph	132	191.9	57.5	N/A	N/A	N/A	185
		160	214.9	50.5	N/A	N/A	N/A	205
		185	261.7	44.8	N/A	N/A	N/A	255
		200	275.3	43.2	N/A	N/A	N/A	275

The data above is provided to show typical values. Results measured at the point of installation may vary according to the installation site and load conditions Test results are measured under the following conditions :-

- 525 Volt RMS AC Supply Voltage
- Operating IE2 motor with matching power rating according to the drive
- Operated at full rated output current capacity

8.2.4. 575 Volt Input

Frame Size	Supply Voltage	Power Rating (kW)	Input Current (A)	iTHD (%)	AC Line Choke	Input Current (A)	iTHD (%)	Output Current (A)
2	575V, 3ph	0.75	3.4	N/A	N/A	N/A	N/A	2.1
		1.5	4.2	N/A	N/A	N/A	N/A	3.1
		2.2	4.9	N/A	N/A	N/A	N/A	4.1
		4.0	8.6	N/A	N/A	N/A	N/A	6.5
		5.5	12.2	N/A	N/A	N/A	N/A	9
3	575V, 3ph	7.5	15.1	N/A	N/A	N/A	N/A	12
		11	20.9	N/A	N/A	N/A	N/A	17
		15	25.5	N/A	N/A	N/A	N/A	22
4	575V, 3ph	15	26.0	N/A	N/A	N/A	N/A	22
		18.5	32.2	N/A	N/A	N/A	N/A	28
		22	39.1	N/A	N/A	N/A	N/A	34
		30	48.9	N/A	N/A	N/A	N/A	43
5	575V, 3ph	37	59.5	N/A	N/A	N/A	N/A	54
		45	70.4	N/A	N/A	N/A	N/A	65
6	575V, 3ph	55	90.6	N/A	N/A	N/A	N/A	78
		75	121.1	N/A	N/A	N/A	N/A	105
		90	143.2	N/A	N/A	N/A	N/A	130
		110	158.4	N/A	N/A	N/A	N/A	150

The data above is provided to show typical values. Results measured at the point of installation may vary according to the installation site and load conditions Test results are measured under the following conditions :-

- 575 Volt RMS AC Supply
- Operating IE2 motor with matching power rating according to the drive
- Operated at full rated output current capacity

8.3. Standby Power Consumption

The following table shows the power consumption of the drive under the following conditions.
Minimum – Value measured when the drive is powered from the nominal rated mains supply voltage (e.g. 230 or 400 Volt), output disabled, cooling fan off, and no external power drawn from the control terminals
Maximum – Maximum value with cooling fan operating, 24V, 100mA load on the control terminals

Frame Size	Voltage	Minimum	Maximum
2	230	8	
	400	10	40
	600		
3	230	8	
	400	11	50
	600		
4	230	11	
	400	16.7	60
	600		
5	230		
	400	19.8	70
	600		
6	230		
	400	31.1	96
	600		
7	230		
	400	38.5	105
8	400		

8.4. DC Bus Discharge Time

DC Bus discharge times are based on maximum rated DC bus, i.e. 480Vac +10% AC supply equates to a DC Bus voltage of 746Vdc within the drive.
In compliance with EN 61800-5-1:2007, all drives have a caution on the rating labels stating “Power down for 5 minutes before removing cover”

Frame Size	Supply Voltage	DC Bus Voltage			Time to reach 50V
		Max	after 5s	after 60s	
2	240Vac +10%	375	324	53	75 sec
	480Vac +10%	746	621	64	86 sec
3	240Vac +10%	375	326	40	30 sec
	480Vac +10%	746	625	73	120 sec
4	480Vac +10%	746	685	98	182 sec
5	480Vac +10%	746	671	99	179 sec
6	480Vac +10%	746	703	246	181 sec
7	480Vac +10%	746	701	343	190 sec

8.5. Earth Leakage Current (Touch Current)

The Optidrive P2 and HVAC (ODP-2 and ODV-2) product range have been designed and tested to comply with the limits defined in EN 61800-5-1: 2007. The test techniques used are as defined in EN 60990:2000.
As stated in the standard 61800-5-1:2007, 5.2.3.5 the motor does not have to be loaded, however, the motor type, cable type and length can have a significant impact on the results. For the purpose of testing and test repeatability Invertek use the following motor:-

Manufacture:	SEW
Model:	DT90L4/ES1T
Type:	Induction motor
Pole:	4
Cable:	1.5m, 2.5mm^2, Type - YY

Frame Size	Typical Supply Conditions		Maximum Supply Conditions	
	Supply Voltage	I_{Touch} (mA)	Supply Voltage	I_{Touch} (mA)
2	1ph 230V 50Hz	2.49	1ph 240V +10% 60Hz	3.28
	3ph 230V 50Hz	1.73	3ph 240V +10% 60Hz	2.73
	3ph 400V 50Hz	4.65	3ph 480V +10% 60Hz	7.37
3	3ph 230V 50Hz	0.93	3ph 240V +10% 60Hz	1.34
	3ph 400V 50Hz	1.55	3ph 480V +10% 60Hz	2.45
4	3ph 230Vac 50Hz	1.42	3ph 240V +10% 60Hz	2.24
	3ph 400Vac 50Hz	2.47	3ph 480V +10% 60Hz	3.90
5	3ph 230Vac 50Hz	0.28	3ph 240V +10% 60Hz	0.44
	3ph 400Vac 50Hz	0.49	3ph 480V +10% 60Hz	0.77
6	3ph 230Vac 50Hz	1.54	3ph 240V +10% 60Hz	2.43
	3ph 400Vac 50Hz	2.68	3ph 480V +10% 60Hz	4.23
7	3ph 230Vac 50Hz	2.74	3ph 240V +10% 60Hz	4.33
	3ph 400Vac 50Hz	4.75	3ph 480V +10% 60Hz	7.51

NOTE
The Touch Current value is based on:-

- Normal operating conditions, i.e. all phases balanced and connected correctly with the motor running
- Drive fitted with integrated EMC filter

8.6. Digital & Analog I/O

8.6.1. Digital Inputs Specification

Voltage Range	8 – 30 V dc, Internal or External supply, NPN (positive logic)
Response Time	< 8ms

8.6.2. Inhibit (Safe) Input

Voltage Range	Inhibit input 18 – 30V dc
Response Time	Inhibit input < 100us for shutdown

8.6.3. Analog Inputs Specification

Range	Current : 0-20mA, 4-20mA. 20mA max input current
	Voltage: -10-10V (Analog Input 1 Only), 0-10V, 0-5V, 0/24V, 30V max input
Resolution	Analog Input 1: 12-bit + sign, <16ms response time (bipolar)
	Analog Input 2: 12-bit, <16ms response time (Uni-Polar)
Accuracy	better than 1% of full scale
Scaling & Offset	Parameter adjustable

8.6.4. Analog Outputs Specification

Range	Current : 0..20mA, 4..20mA, 20mA max
	Analog : 0..10V, 0 / 24V (digital), 20mA max
Resolution	10-bit
Accuracy	better than 1% of full scale

8.6.5. Relay Outputs (1x N.O, 1x C.O)

Maximum Switching Voltage :	250VAC, 30 VDC
Maximum Switching Current :	5A at 30 Volt DC, 6A at 250 Volt AC

8.7. Environmental Data

8.7.1. Temperature Range	
Ambient Temperature Range : Operation	IP20 Drives : -10 - +50°C (14 - 122°F) without derating IP55 & IP66 Drives : -10 - + 40°C (14 - 104°F) without derating
Note : No frost or condensation permissible	
Ambient Temperature Range : Storage	-40 … 60 ºC. No Frost or Condensation
8.7.2. Altitude	
Maximum Altitude (No derating)	1000m Derate above 1000m by 1% per 100m
Maximum Altitude (UL Approved)	2000m
Maximum Altitude	4000m
8.7.3. Relative Humidity	
Relative Humidity Limit	95% Maximum, non-condensing
8.7.4. Contamination Levels	
Standard	IEC 721-3-3, Non-conductive dust allowed
Transportation	Class 1C2 (chemical gases), Class 1S2 (solid particles)
Storage	Class 2C2 (chemical gases), Class 2S2 (solid particles)
Operation	Class 3C2 (chemical gases), Class 3S2 (solid particles
8.7.5. Vibration Levels	
Bump Test	Testing in each of three mutually perpendicular axes in turn. Reference standard: IEC 60068-2-29 Severity: 18g, 6ms, half sine No of bumps: 600 (100 per axis)
Random Vibration Test	Testing in each of three mutually perpendicular axes in turn. Reference standard: IEC 60068-2-64 Severity: $1.0m^2/s^3$ ($0.01\ g^2/Hz$) ASD from 5-20Hz -3dB/octave from 20 to 200Hz Duration: 30 minutes in each of 3 mutually perpendicular axes.
Sinusoidal vibration test	Testing in each of three mutually perpendicular axes in turn. Reference standard: IEC 60068-2-6 Frequency range: 2-500Hz Severity: 3.5mm peak displacement from 2 to 9Hz 10 m/s^2 peak acceleration from 9 to 200Hz 15 m/s^2 peak acceleration from 200 to 500Hz Sweep rate: 1 octave/minute Duration: 15 minutes in each of 3 mutually perpendicular axes.

8.8. Response Times

Command Source	Response Time
STO Input	<25ms
Digital Input	<8ms
Analog Input	<16ms
Modbus RTU Interface	<8ms From receipt of valid command
CAN Open Interface	<8ms From receipt of valid command
Extended I/O Option	<8ms
Plug In Fieldbus Option	<20ms + Fieldbus Cycle Time From receipt of valid command
Master / Slave Function	<8ms, response, 60ms cycle
Power Stage	<10ms to enable output

8.9. Motor Control Performance

8.9.1. Enhanced V/F Mode

Speed Regulation : + / - 20% of motor slip with slip compensation enabled

8.9.2. 3GV Vector Mode without Encoder Feedback

Static Speed Regulation : + / - 0.033%
Speed Regulation 0 – 200% Load Range : + / - 0.5%
Torque Response : 1- 8ms
Torque Linearity (10 – 90% of motor rated speed, 20 – 100% load torque range) : + / - ???%

8.9.1. 3GV Vector Mode with Encoder Feedback

Static Speed Regulation : + / - 0.033%
Speed Regulation 0 – 200% Load Range : + / - 0.033%
Torque Response : 1- 8ms
Torque Linearity (10 – 90% of motor rated speed, 20 – 100% load torque range) : <+ / - 1%

8.10. Output Current Limit

8.10.1. Overload Operation

Optidrive P2 provides the following

- 150% Output current / 60 Seconds Maximum
- 200% Output current / 3.75 Seconds Maximum

At low output frequency levels, overload accumulation is faster, to account for the reduced motor cooling effect of the fan.

8.10.2. Overview

Optidrive P2 features both hardware and software protection of the output stage to prevent damage. In addition, an Ixt system is used to monitor motor overload condition and prevent damage to the motor due to operation for prolonged periods at high load.
I x t protection is software based, using the value for motor rated current programmed in P1-08. An internal accumulator register is used to estimate the point at which damage may occur to the motor, and operates as follows
Motor Current < P1-08
The accumulator value reduces towards zero. The time required depends on the actual load current as explained further below.
Motor Current = 100% P1-08
The accumulator value remains static.
Motor Current > 100% P1-08 < 150% P1-08
The accumulator value increases at a rate proportional to the overload level, e.g. (Motor Current / Rated current) – 100%. If the overload limit is reached, the drive will trip, displaying it.trp. to protect the motor.
Motor Current > 150% P1-08
For high current levels, the accumulator operates 16 times faster than for current levels below 150% of P1-08.
Peak over current trip levels are shown in the table below.

8.10.3. Example Operation

Maximum overload operation is 150% of motor rated current for 60 seconds. As this represents an overload of 50%, the accumulator trip level is 3000. This means that if the drive operates with 125% load current, the time can be calculated as 3000 / (125 – 100) = 120 Seconds.
Above 150% load, accumulation is 16 times faster, hence for 160% load current, the time is 3000 / 16 / (160 – 150) = 18.75 seconds

8.10.4. Overload Curve

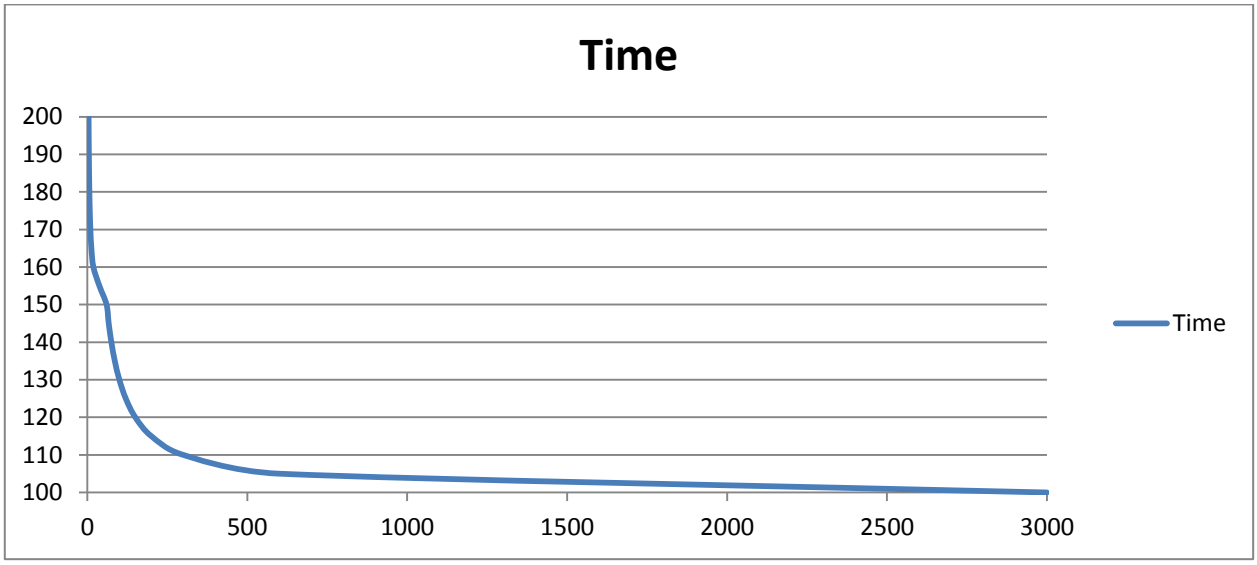

8.10.5. Over Current Trip Level

The following table shows the peak over current trip levels applicable to each model.

Frame Size	Voltage	kW	O-I Trip Level (Default P1-08)	H O-I Trip Level
2	230	0.75	14A	34.3A
		1.5	20A	34.3A
		2.2	30A	34.3A
	400	0.75	7A	34.3A
		1.5	12A	34.3A
		2.2	17A	34.3A
		4	27A	34.3A
	600	0.75	7A	34.3A
		1.5	10A	34.3A
		2.2	14A	34.3A
		4	17A	34.3A
		5.5	26A	34.3A
3	230	4	55A	64A
		5.5	70A	70A
	400	5.5	45A	64A
		7.5	55A	64A
		11	70A	70A
	600	7.5	45A	70A
		11	55A	70A
		15	70A	70A
4	230	5.5	70A	148A
		7.5	85A	148A
		11	120A	148A
	400	11	70A	148A
		15	90A	148A
		18.5	110A	148A
		22	120A	148A
	600	15	90A	148A
		18.5	100A	148A
		22	110A	148A
		30	120A	148A
5	230	15	180A	258A
		18.5	180A	258A
	400	30	180A	258A
		37	180A	258A
	600	37	180A	258A
		45	180A	258A
6	230	22	225A	258A
		30	320A	381A
		37	425A	516A
		45	450A	516A
	400	45	225A	258A
		55	320A	381A
		75	425A	516A
		90	450A	516A
	600	55	225A	258A
		75	320A	381A
		90	425A	516A
		110	450A	516A
7	230	55	570A	767A
		75	650A	767A
		90	700A	767A
	400	110	570A	767A
		132	650A	767A
		160	700A	767A
8	400	200	1000A	1500A
		250	1000A	1500A

8.11. Under / Over Voltage Trip Levels

The following levels are not user adjustable, and define the operating voltage levels of the drive and brake chopper circuit.

Drive Rated Supply Voltage	DC Bus Voltage Level (Volts DC)				
	Brake Chopper On	Brake Chopper Off	Under Voltage Trip	Minimum Operating	Over Voltage Trip
200 – 240 Volts AC	390	378	160	239	418
380 – 480 Volts AC	780	756	320	474	835
480 – 525 Volts AC	890	862	360	540	930
500 – 600 Volts AC	975	945	400	598	1020